Propeller Aircraft

Propeller Aircraft

Basic Teaching Information					
Teaching facility	AI Module 1	Teaching mode	Project-based learning	Class duration	90 minutes

Teaching Objectives

In this lesson, by learning the course and under the guidance of the teacher, the students shall:

- Know the difference between a propeller aircraft and other aircrafts (such as seaplanes, helicopters, etc.).
- Learn and understand the gear-driven structure
- Application and learning of closed loop motor

Key Points and Difficulties

- Correctly build the gear-driven structure
- Fixing distance and building sequence of key gear-driven
- Focusing on mastering the use of action programming directive blocks.
- Understanding the sequential structure of programming correctly.

Propeller Aircraft

Step 1 Introduction of the Topic

- One day, pilot Max received a parcel with a help video from his friend Tom: Tom’ s aircraft ran out of fuel in halfway and now trapped on an island. He needs Max to fly with fuel to save him.

However, Max’ s aircraft is under maintenance and cannot fly at the moment. How can we help Max to rescue Tom?

Ask the students to speak their minds.

- Ask the students if they have taken a flight?

Ask the students to speak their minds.



Step 2 Topic Analysis

- Design the shape of the aircraft

Guide the students to design their own wiper on the blackboard

- How does the aircraft work
- How many propellers does the aircraft have
- What pieces can be used to build the propeller of the aircraft
- What do we need to make the propeller of the aircraft to rotate

Step 3 Start the Hands-on

Guide the students to build a propeller aircraft and explain the gear-driven structure therein.

Briefly introduce students to graphical programming software to guide students through programming

Learn to skillfully set the motor module

Adjust the propeller speed by debugging the speed value.

Refer to the guidelines to familiarize students with the steps to connect the controller to the computer via a USB cable.

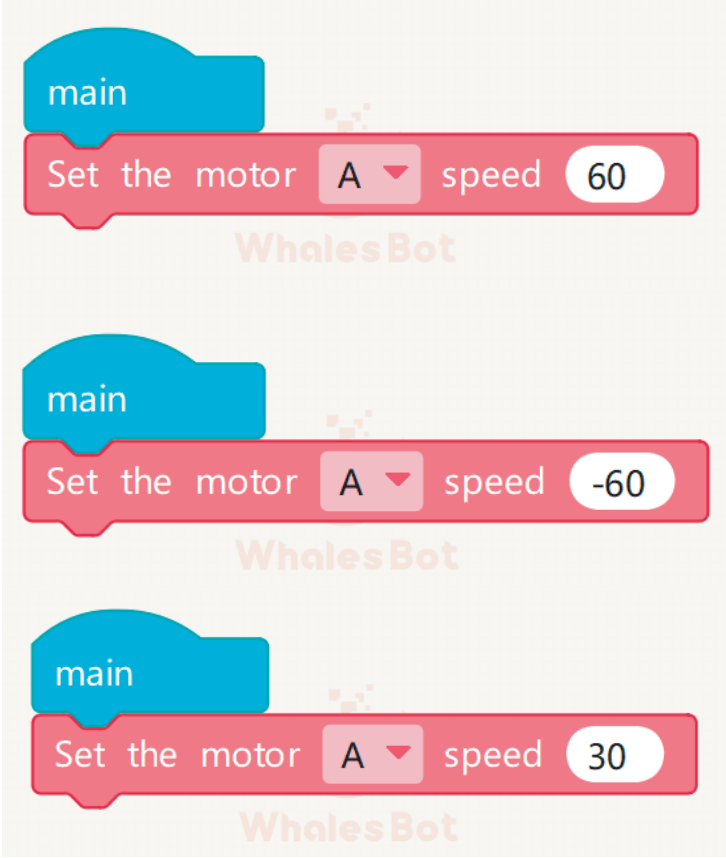

Step 4 Contents Assessment

Post-class summary, which can be reflected by multiple choices or true or false questions as far as possible, other than gap filling or questions

For example, is the propeller aircraft we did today using gear-driven or linkage?

Is the program module learned today setting up the motor, etc., to emphasize the knowledge.

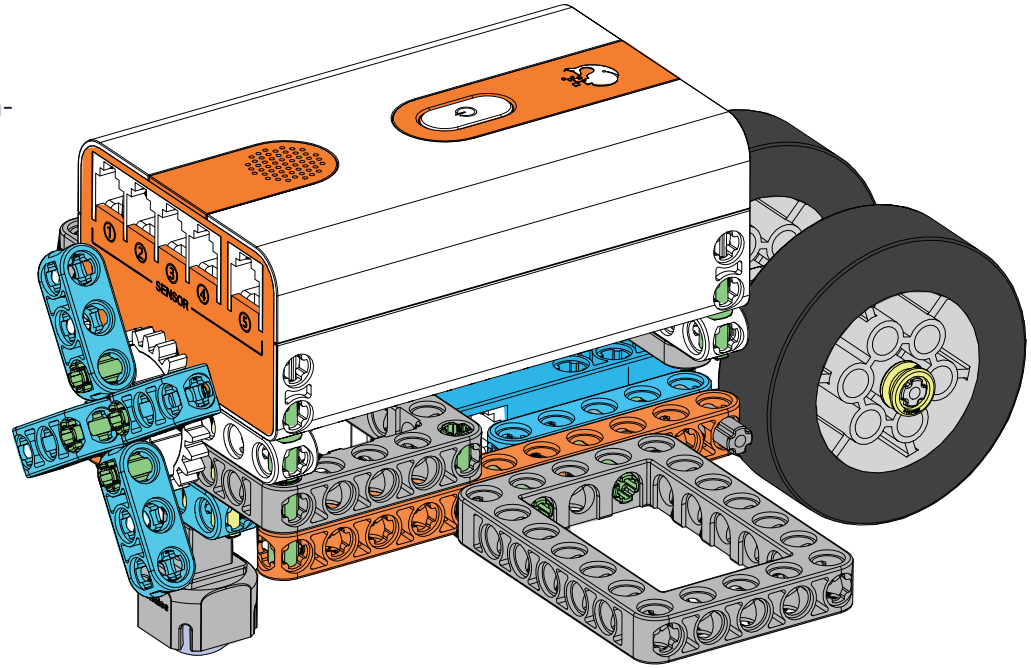

Step 5 Display of Outcomes

Ask the students to present their outcomes to their parents.

Introduce what we did today? Propeller aircraft!

Are we using gears-driven to move the propeller of the aircraft?

Propeller Aircraft

1

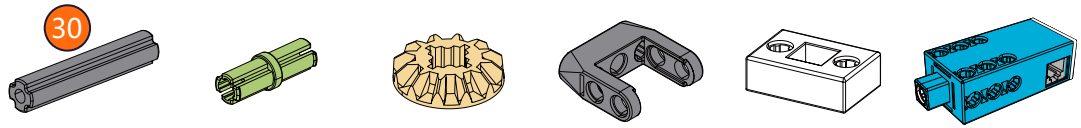

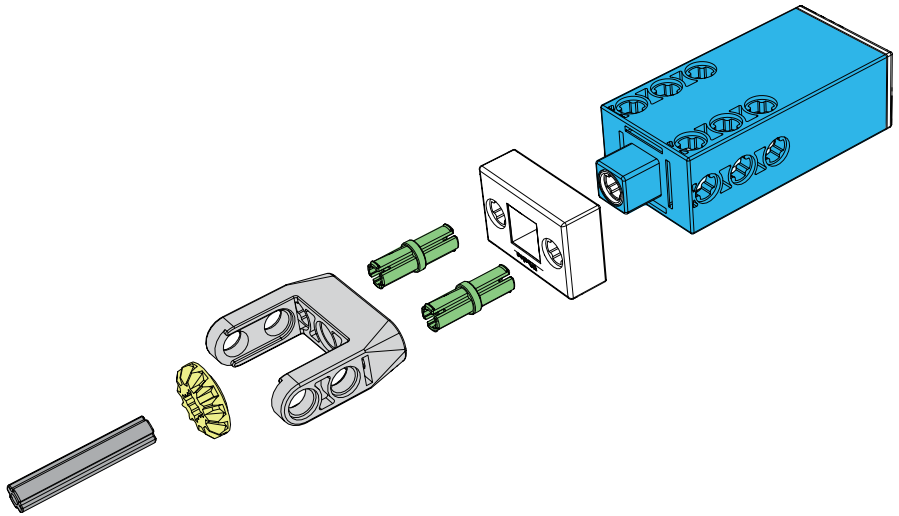

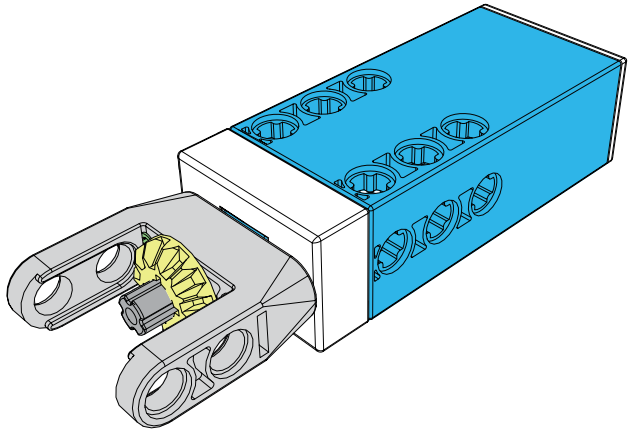

Propeller Aircraft

2

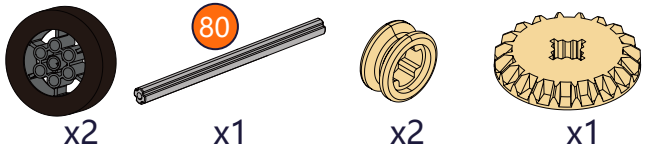

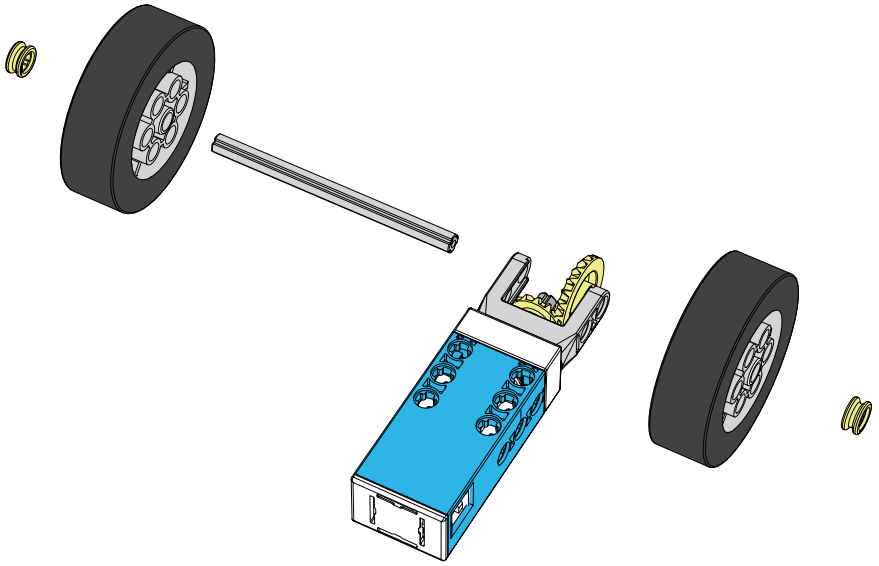

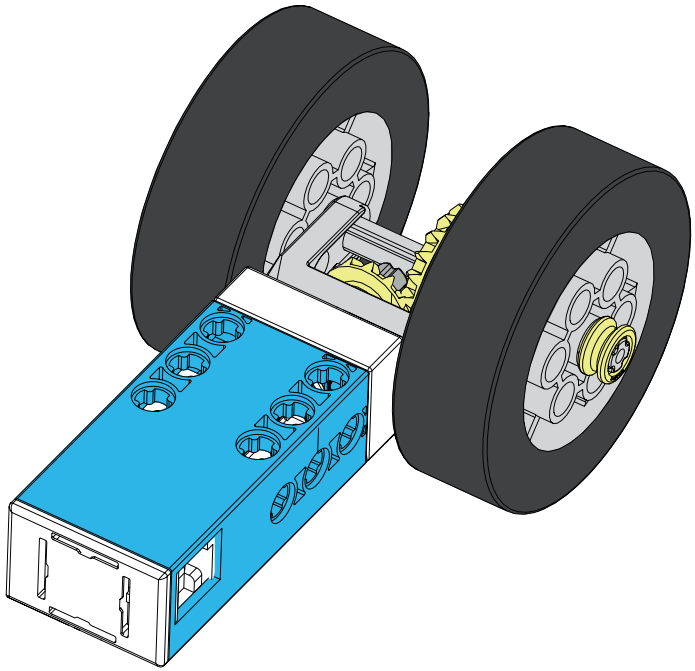

Propeller Aircraft

3

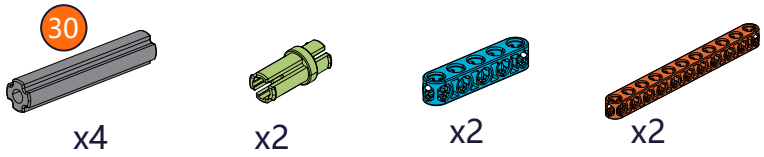

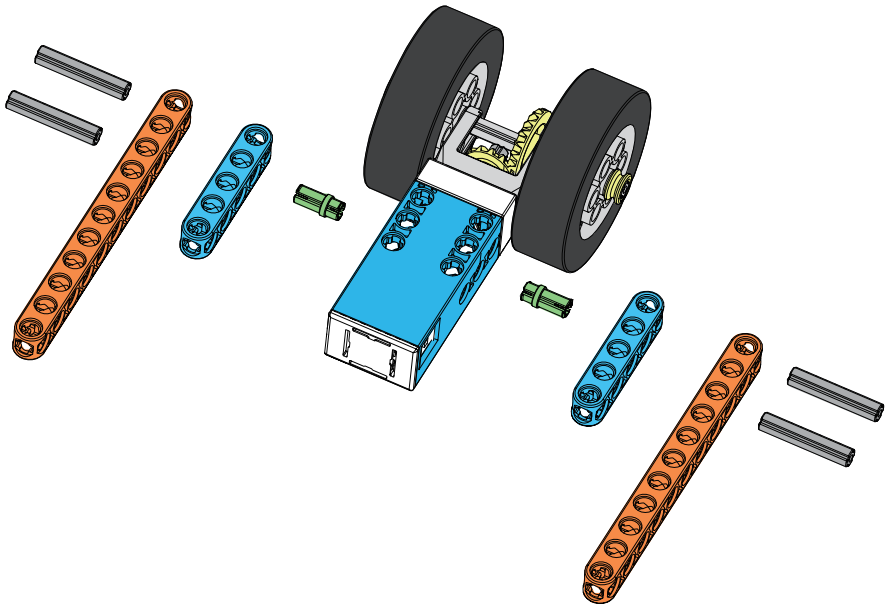

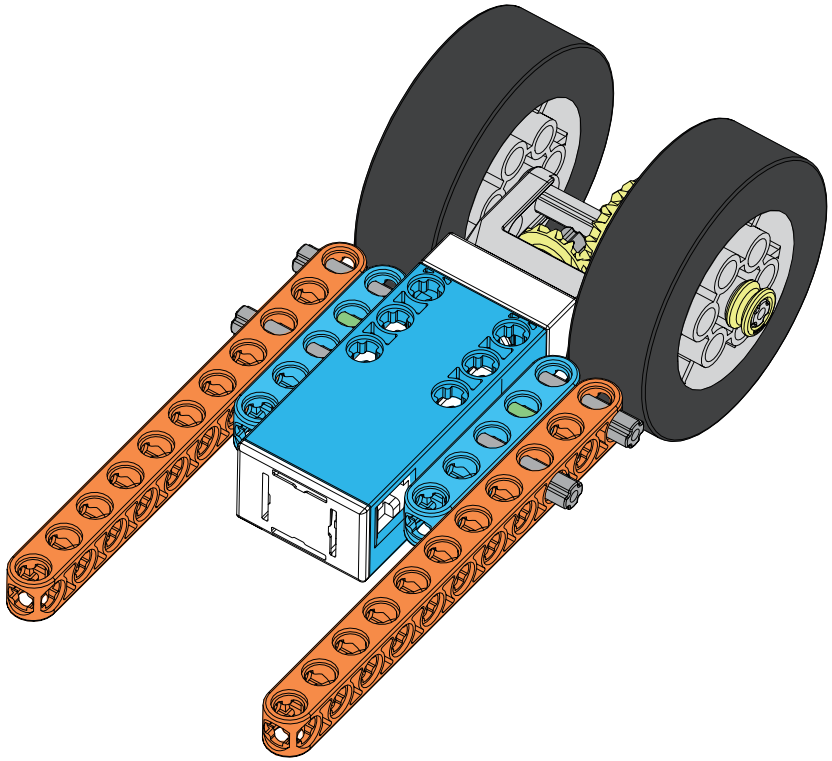

4

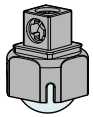
x1

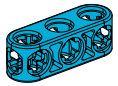
x1

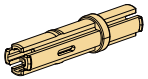
x3

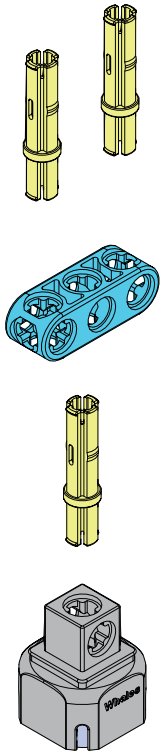

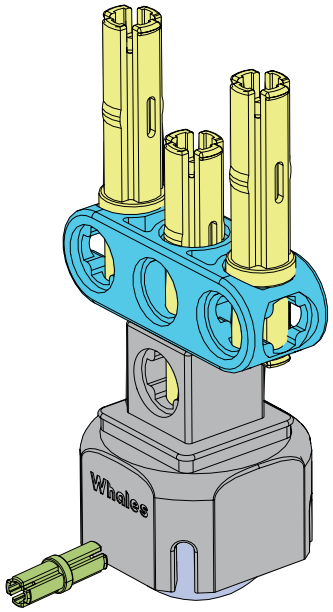

Propeller Aircraft

5

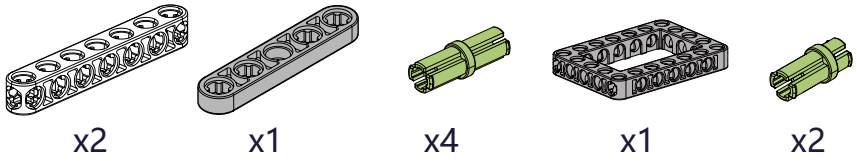

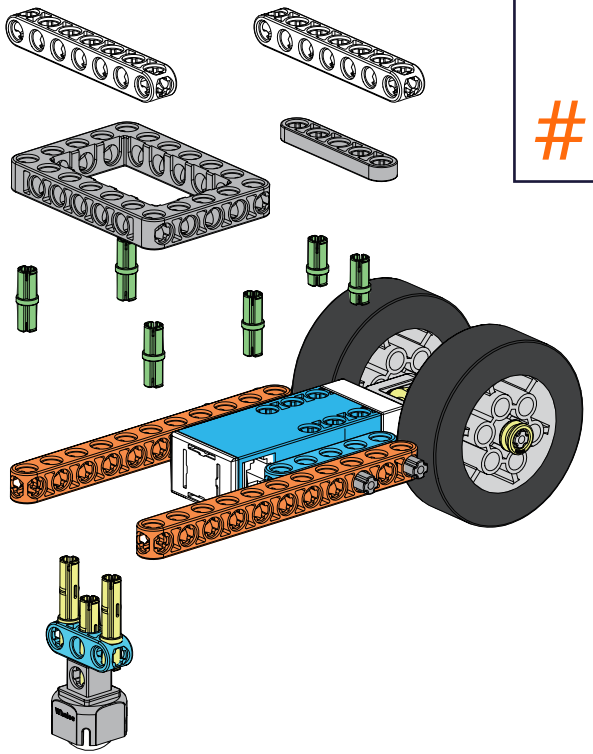

#3

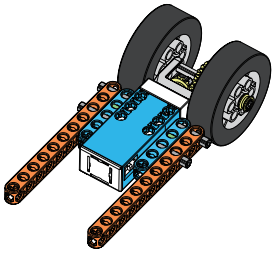

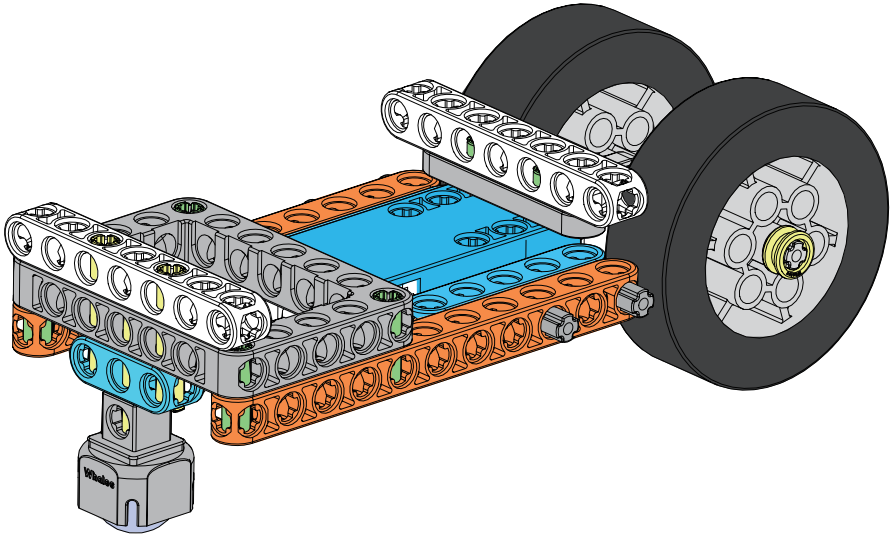

Propeller Aircraft

6

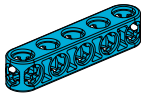
x4

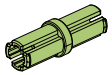
x4


x1

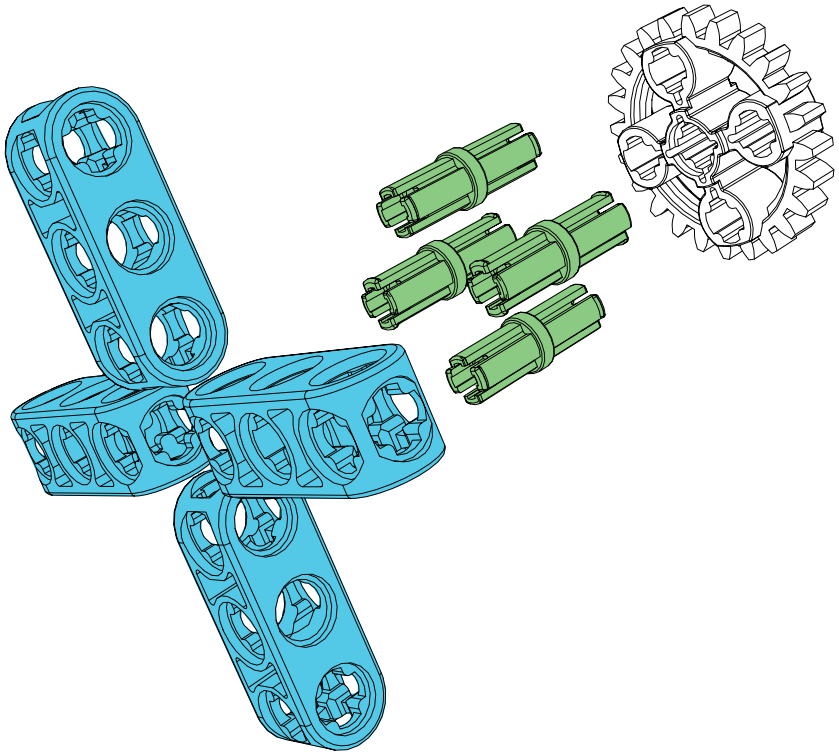

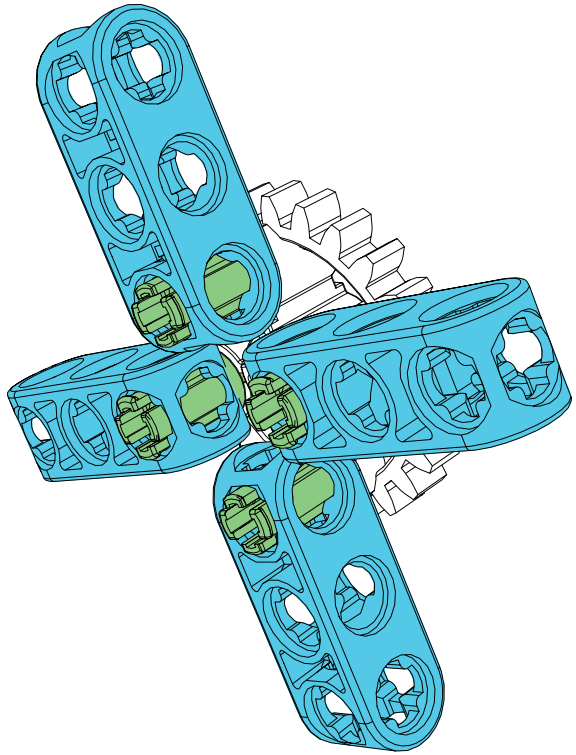

7

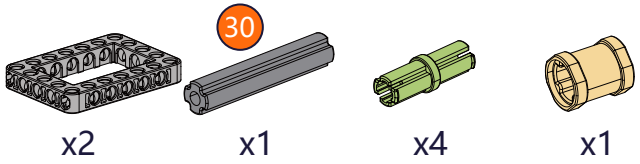

x2 x1 x4 x1

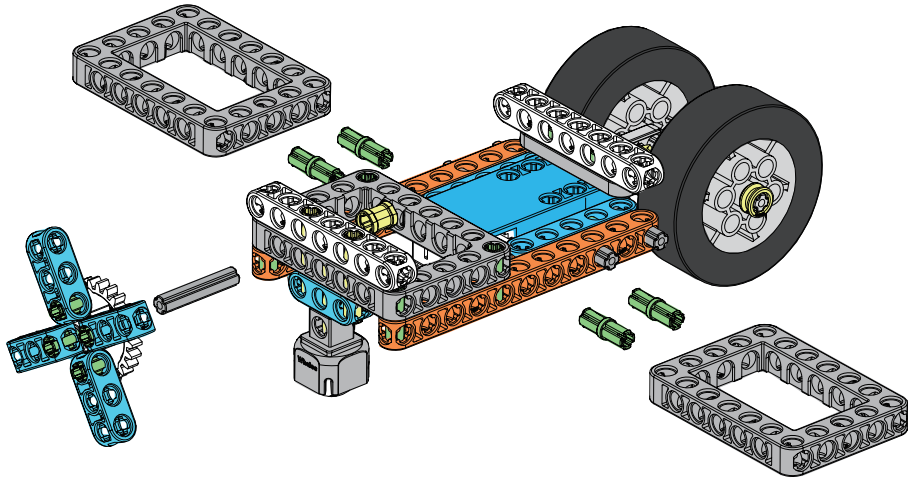

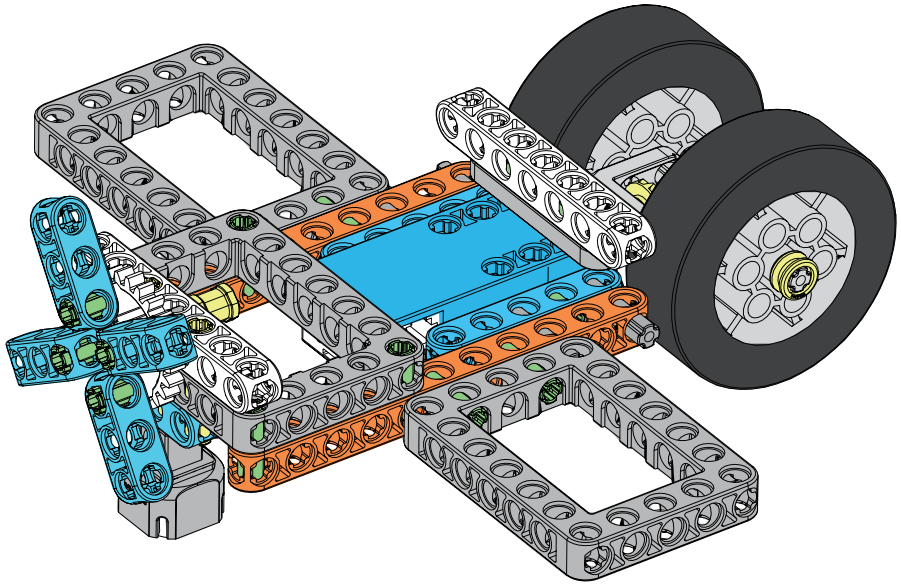

8

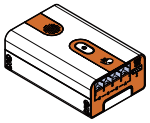
x1

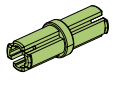
x4

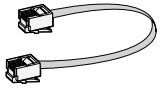
x1

