Crane

Crane

Basic Teaching Information					
Teaching facility	AI Module 1	Teaching mode	Project-based learning	Class duration	90 minutes

Teaching Objectives

In this lesson, by learning the course and under the guidance of the teacher, the students shall:

- Learn how cranes work
- Understand the fixed pulley and the movable pulley in the pulley block, which is to pull the load and change the direction of the applied force.
- Learn the use of motor modules and delay & waiting modules in the programming module

Key Points and Difficulties

- Learn the use of dual-motor
- Know the pulley block (movable pulley and fixed pulley)

Step 1 Introduction of the Topic

• Have you ever passed the sites constructing buildings on your way to school? Then do you know what materials to use for building? Is it cement, steel, etc... Aren' t they very heavy? Can the workers handle that? No way, right? What should they do? Have you ever seen a construction equipment that is taller than a house? Do you know what its name is?

If there are children don' t know the crane, play the prepared pictures or videos of cranes via TV.

Ask the students to speak their minds.

Ask the students have they ever seen a crane?

Ask the students to speak their minds.



Step 2 Topic Analysis

- Design the shape of the crane

Guide the students to design their own crane on the blackboard

- How does the crane work
- Which joints of the crane can move
- What pieces can be used to build such a crane
- What do you need to slew a crane

Step 3 Start the Hands-on

Guide the students to build a crane and explain the gearing structure therein.

Briefly introduce students to graphical programming software to guide students through programming

Adjust the crane’ s operating speed by debugging the speed value.

Refer to the guidelines to familiarize students with the steps to connect the controller to the computer via a USB cable.

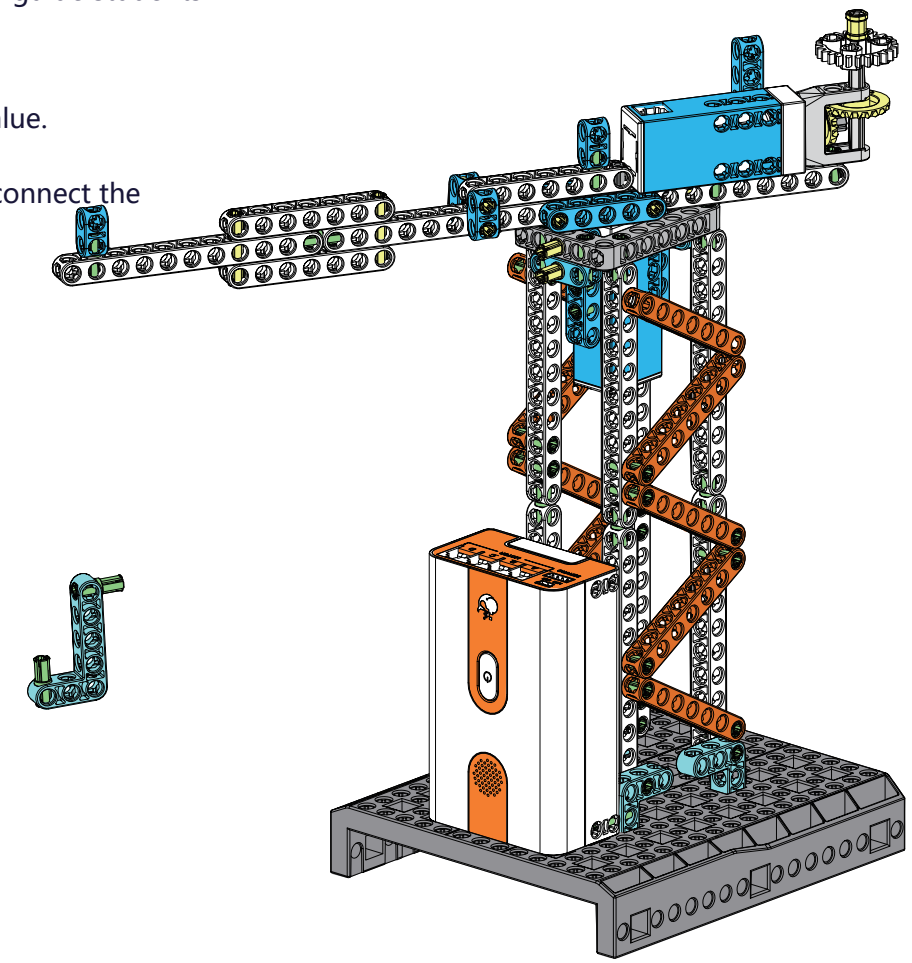

Step 4 Contents Assessment

Post-class summary, which can be reflected by multiple choices or true or false questions as far as possible, other than gap filling or questions

For example, can the arm of the crane we did today slew left and right?

Is the program module learned today setting up the motor, etc., to emphasize the knowledge.

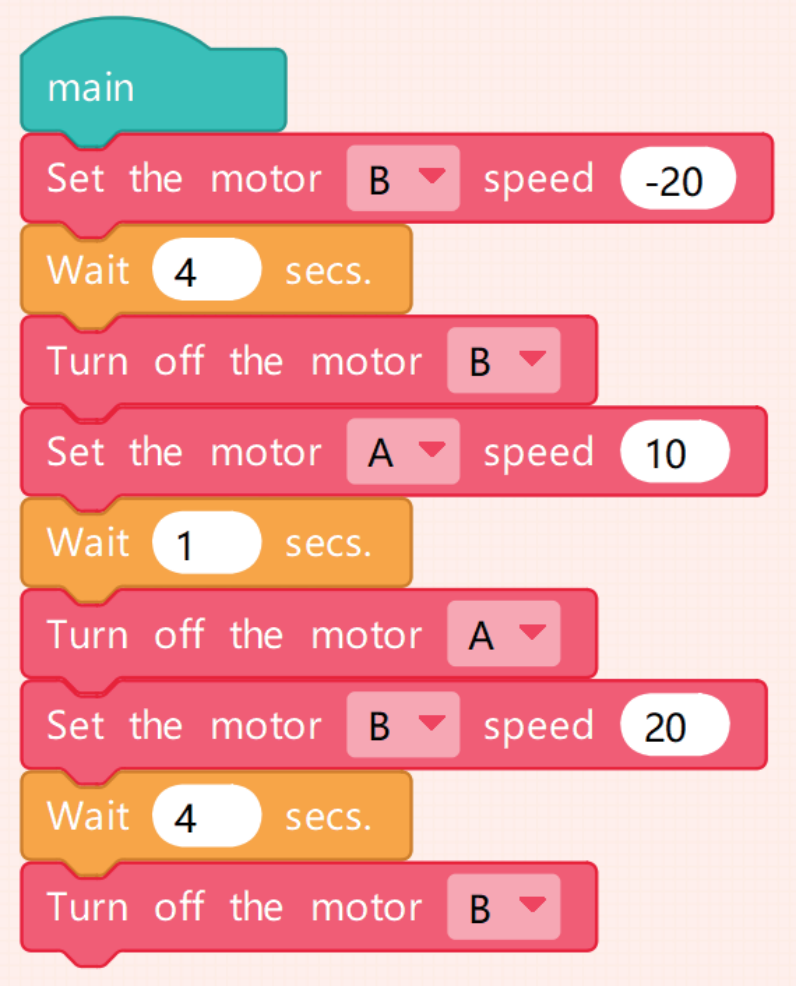

Step 5 Display of Outcomes

Ask the students to present their outcomes to their parents.

Introduce what we did today? A crane!

Is it installed in a construction site?

Crane

1

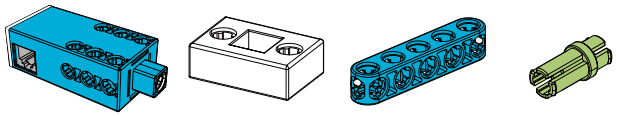

x1 x1 x2 x4

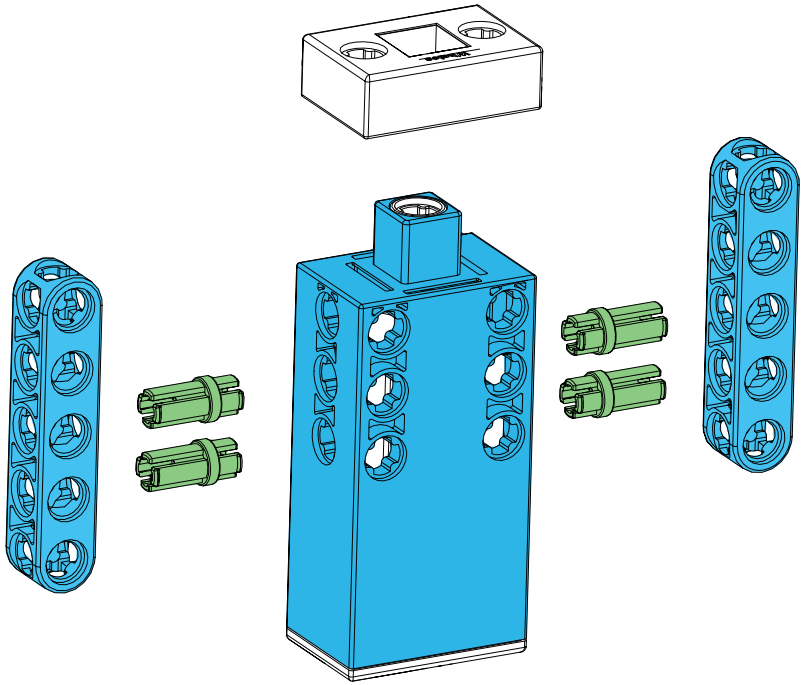

x2

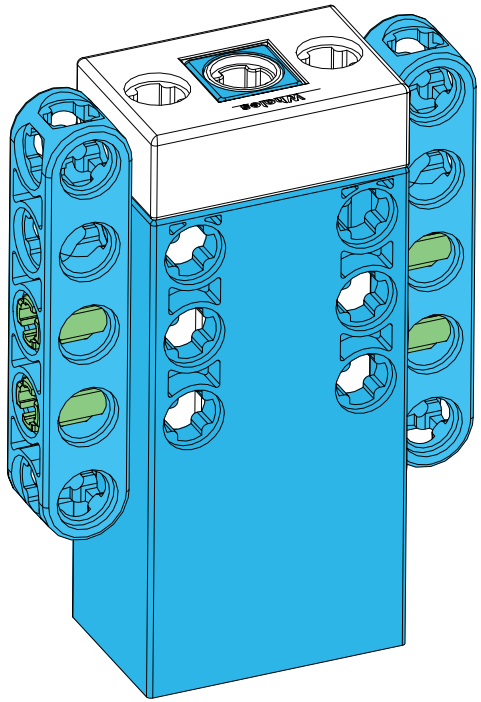

x2

Crane

2

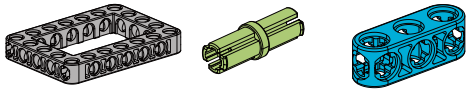

x1 x4 x2

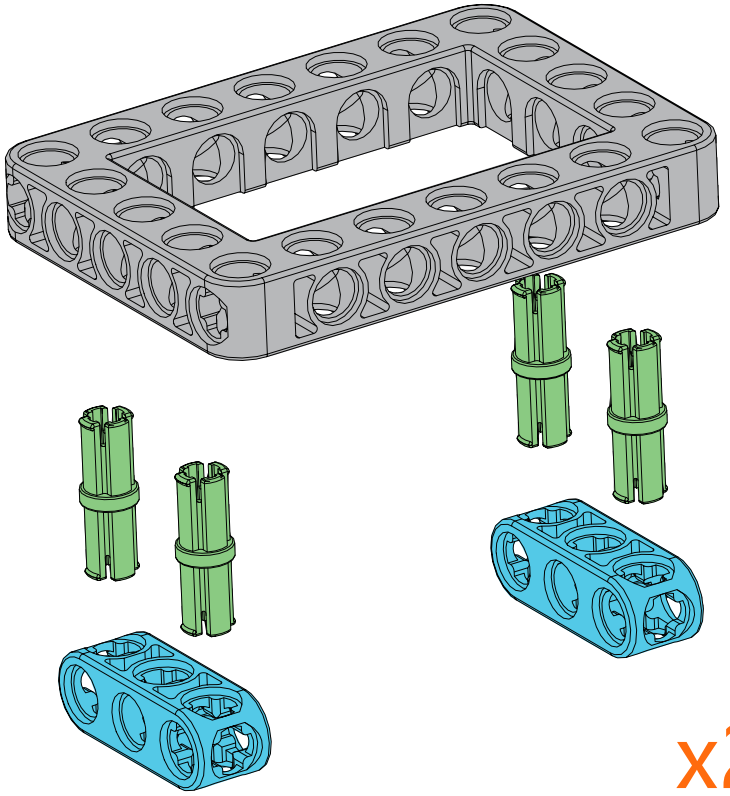

x2

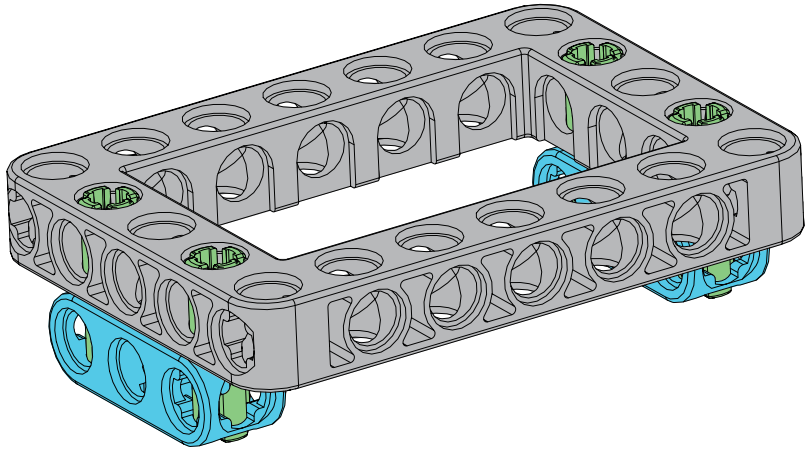

3

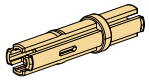

x4

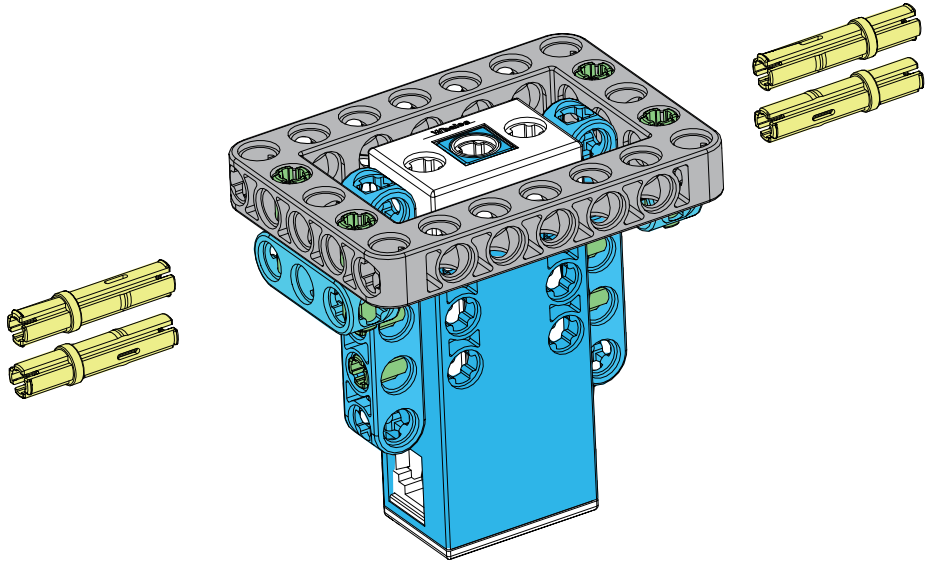

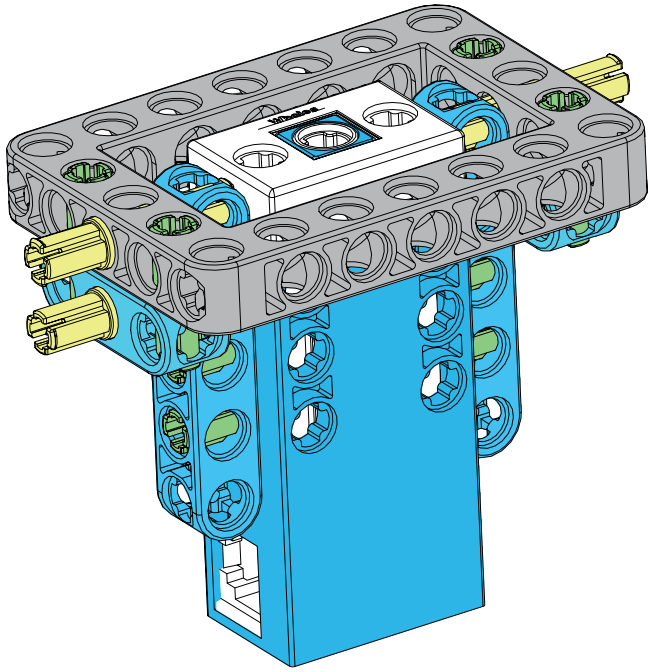

Crane

4

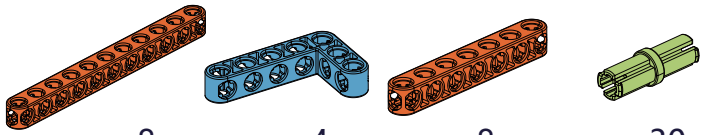

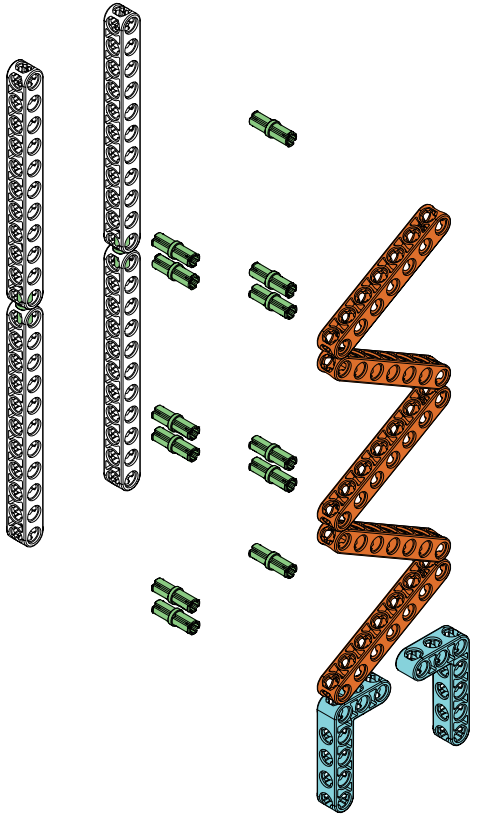

x2

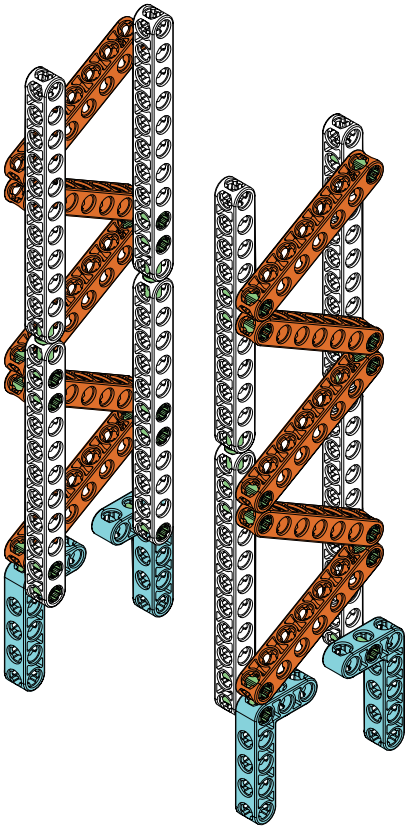

5

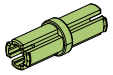

x4

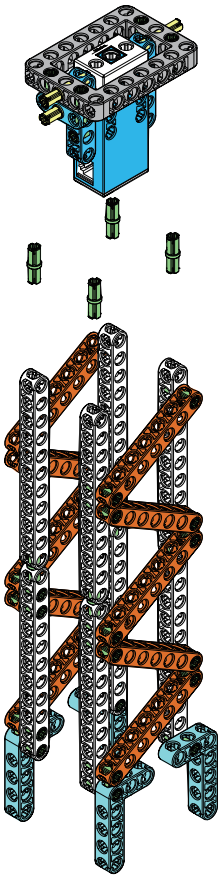

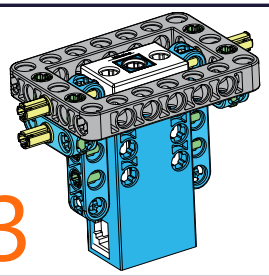

#3

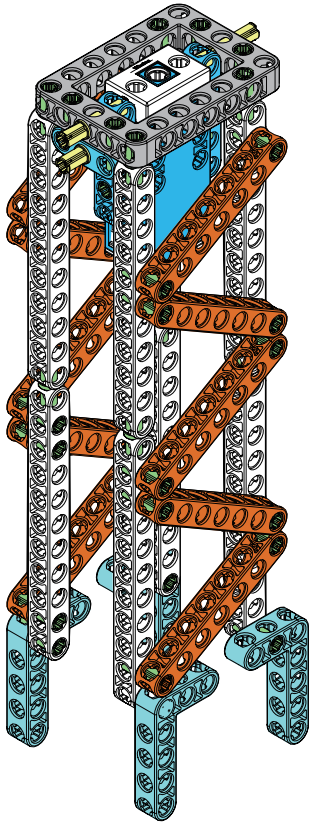

6

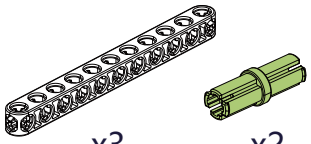

x3

x2

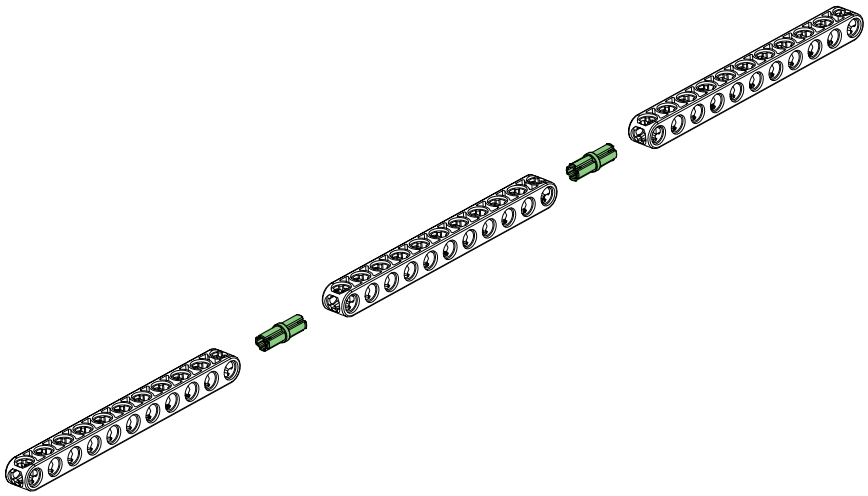

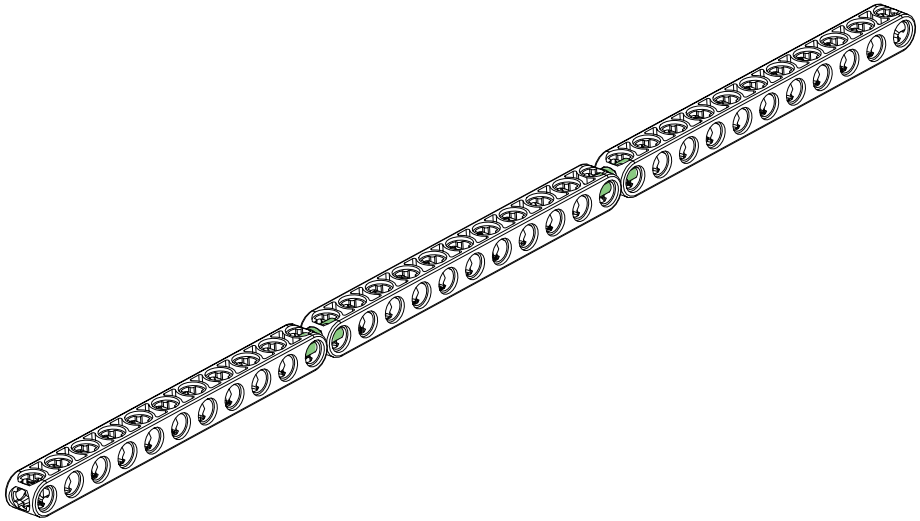

7

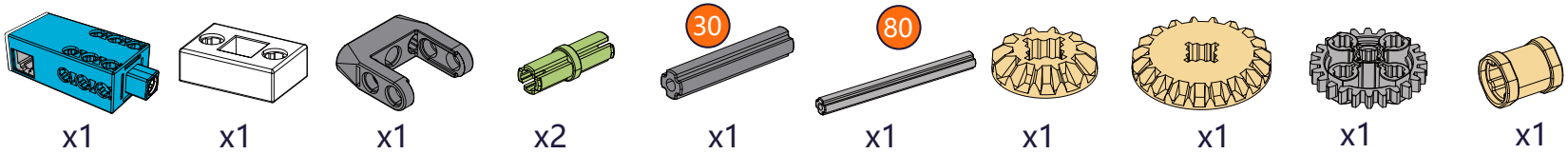

x1 x1 x1 x2 x1 x1 x1 x1 x1 x1

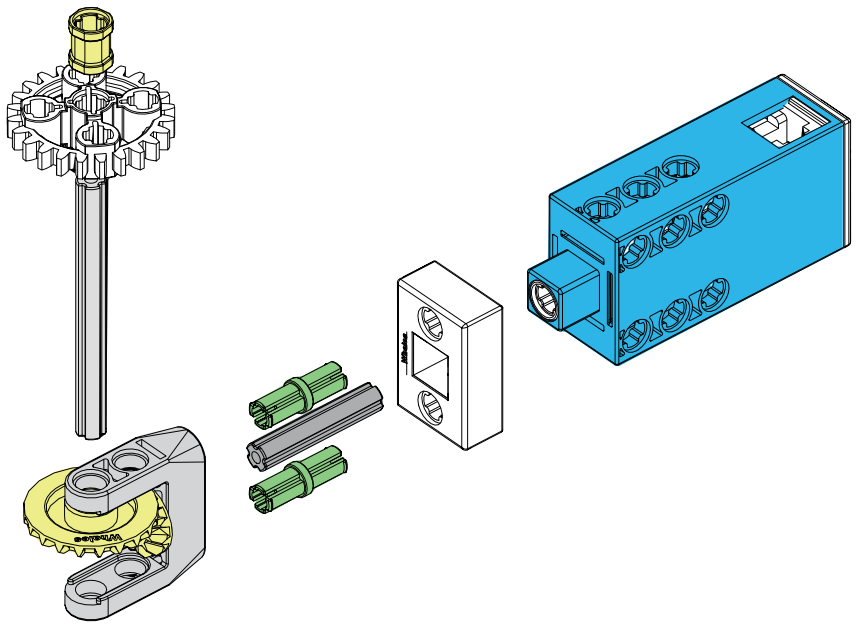

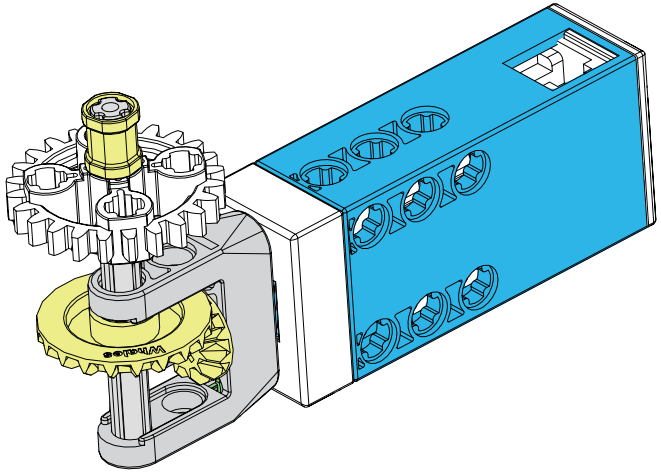

Crane

8

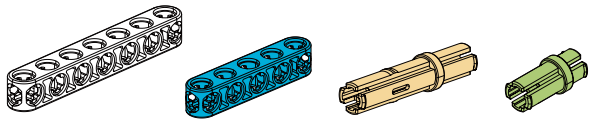

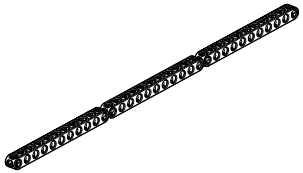

#6

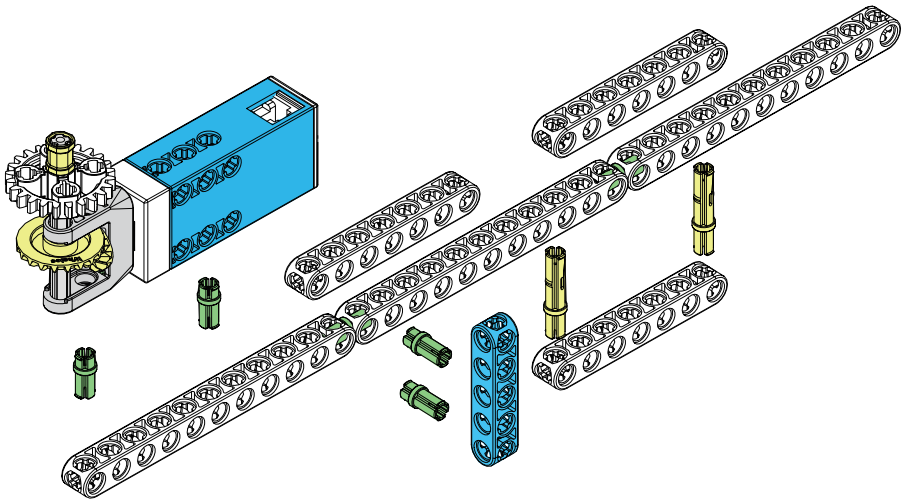

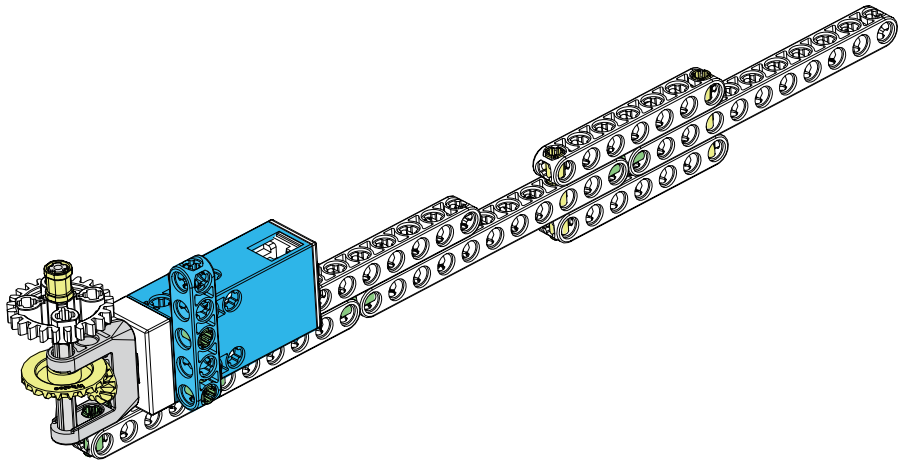

9

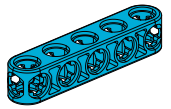
x2

x4

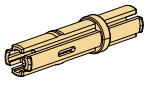
x4

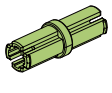
x2

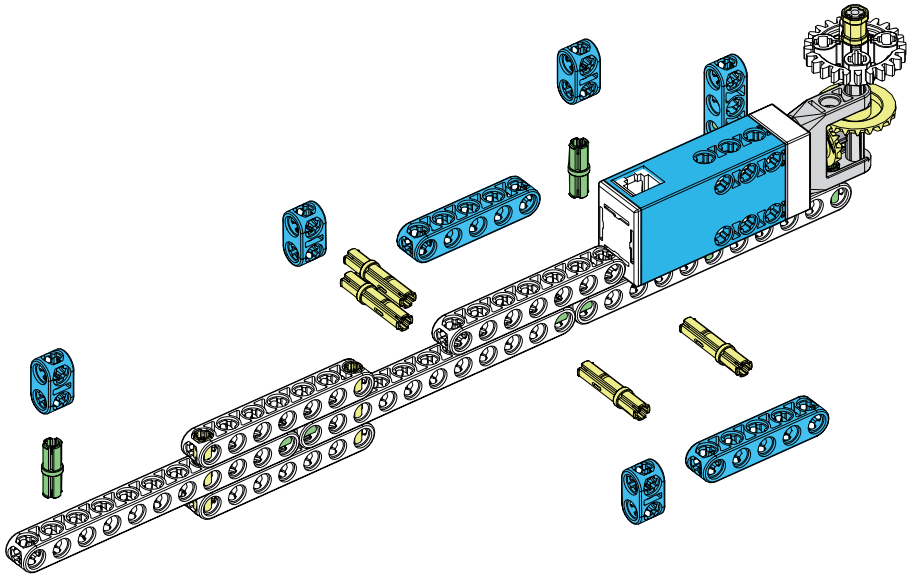

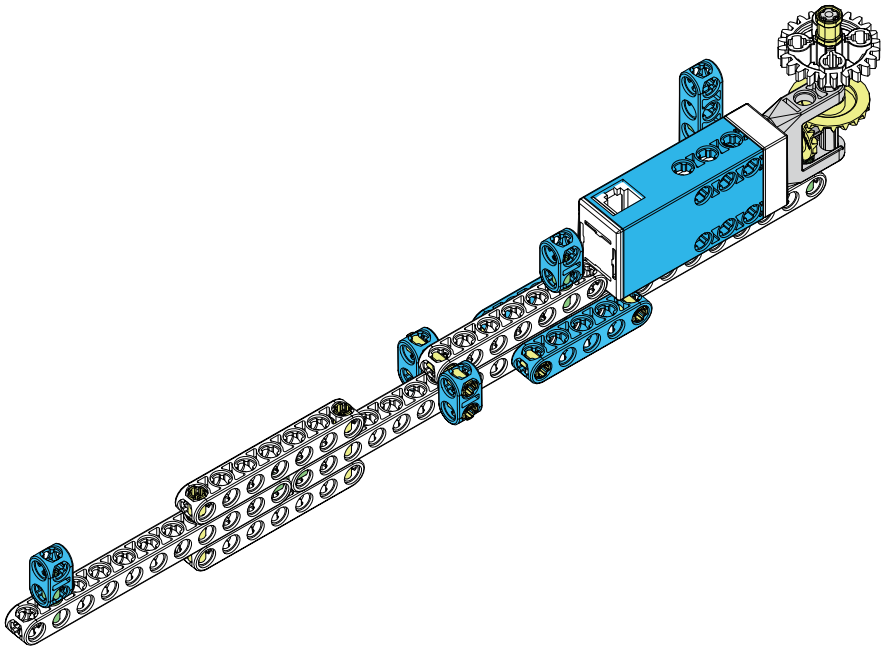

10

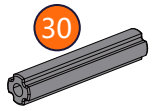

x1

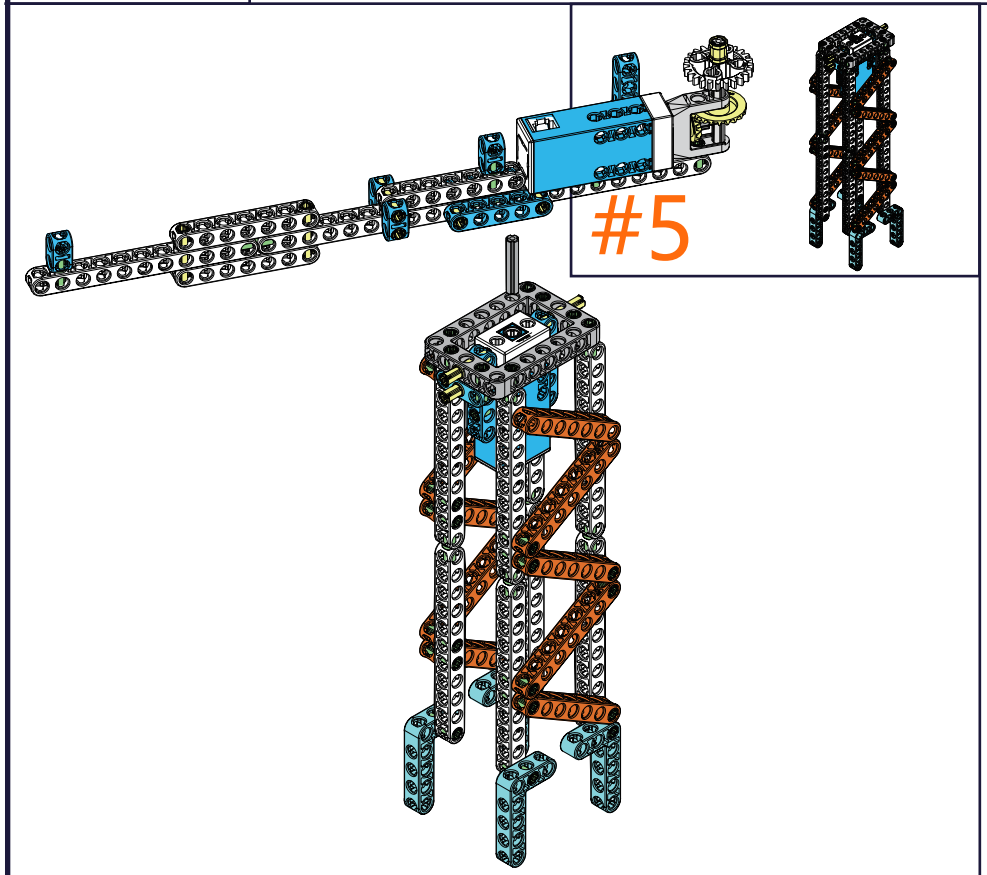

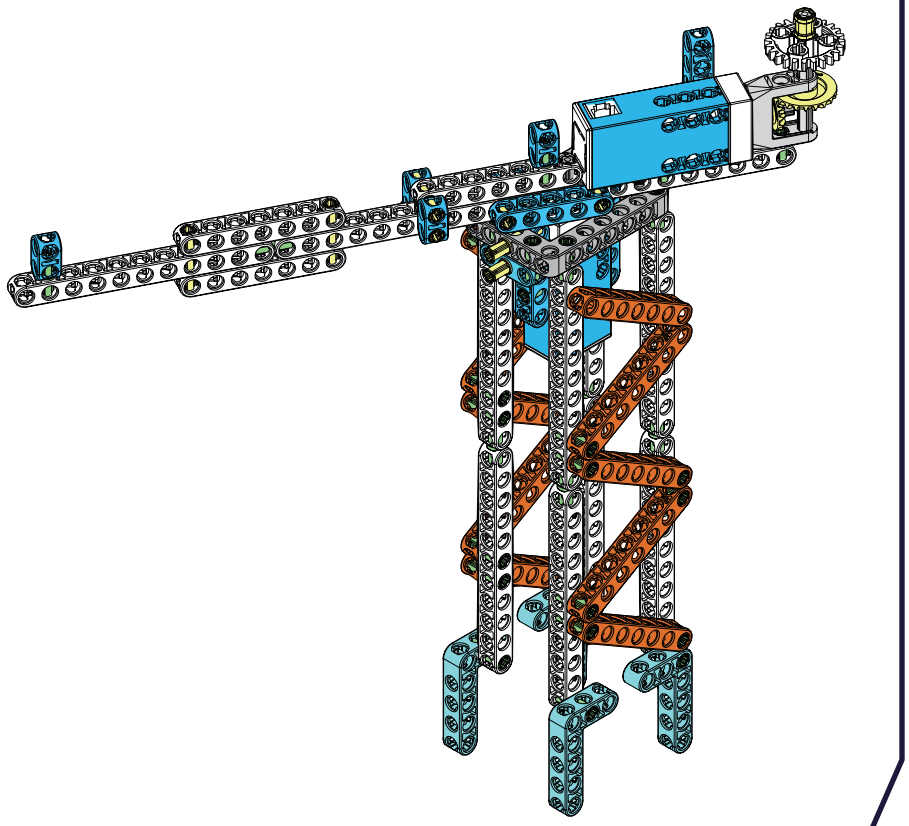

Crane

11

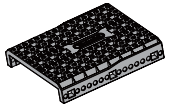

x1

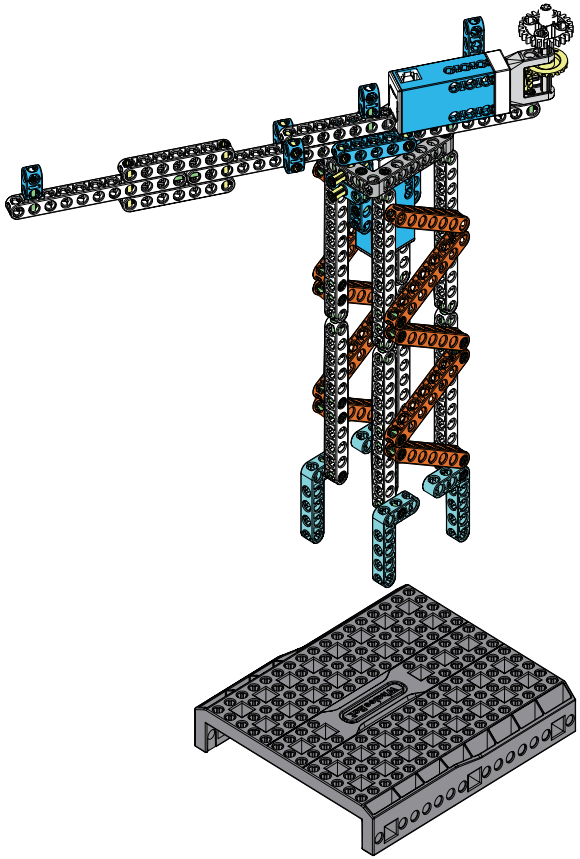

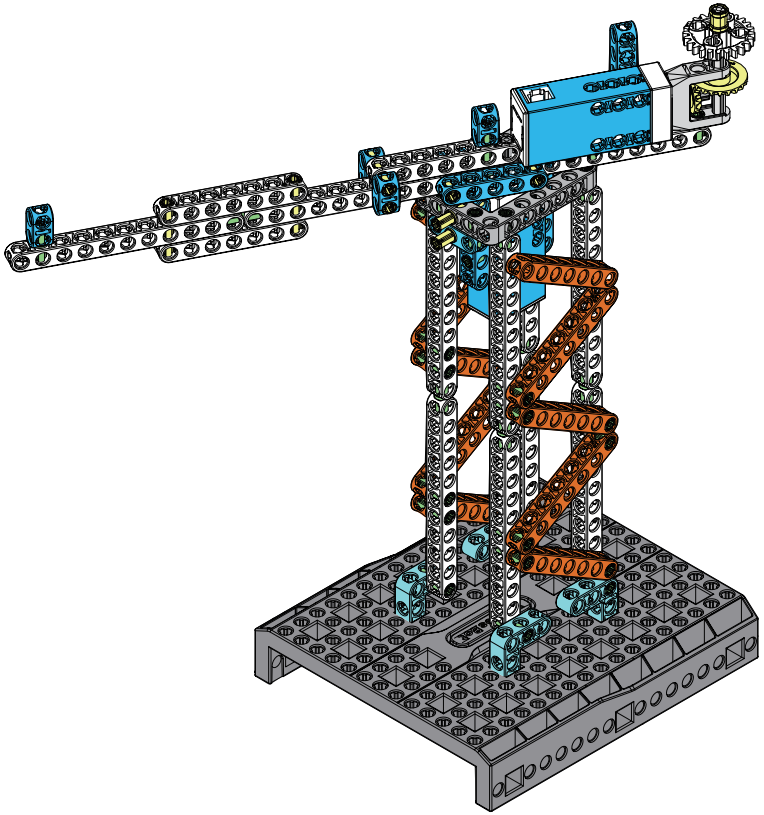

12

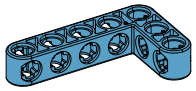
x1

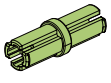
x1


x1

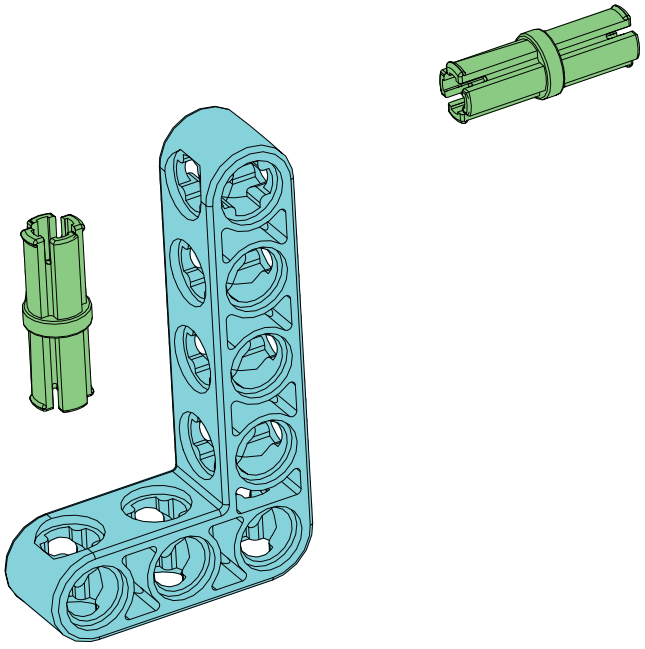

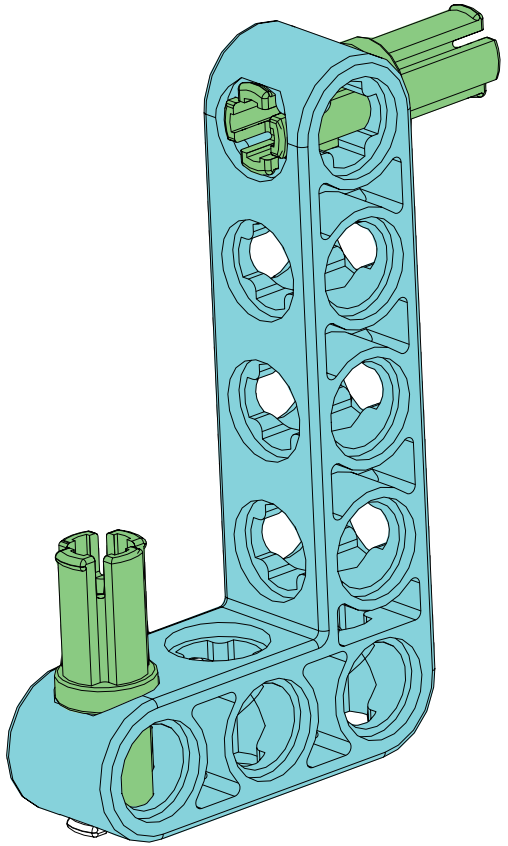

13

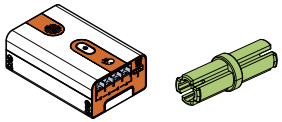
x1

x2

