Caged Bird

Caged Bird

Basic Teaching Information					
Teaching facility	AI Module 1	Teaching mode	Project-based learning	Class duration	90 minutes

Teaching Objectives

In this lesson, by learning the course and under the guidance of the teacher, the students shall:

- Understand visual persistence
- Learn and know how to use a small motor and paper to make rotating cages and birds to achieve visual persistence
- Application and learning of closed loop motor

Key Points and Difficulties

- Understanding about the effect of visual persistence
- Focus on how to achieve visual persistence with small motors and paper.
- Focusing on mastering the use of action programming directive blocks.
- Understanding the sequential structure of programming correctly.

Caged Bird

Step 1 Introduction of the Topic

- Once upon a time, an old man raised a bird. The bird was very beautiful, with fair feathers and delicate wings. It lived in the middle of the paper, and there was a bird cage on the back of the paper. The old man loved this bird the most, but if he didn’ t keep the bird in the cage, it would fly away, and he would never see the beautiful bird again. So the question is, how to put the bird on the paper into the cage on the back?

Let’ s work together today to find a way to keep the bird on this piece of paper in a cage, ok?

Ask the students to speak their minds.

- Ask the students have they ever seen a bird kept in a cage?

Ask the students to speak their minds.



Step 2 Topic Analysis

- Design the shape of the cage

Guide the students to design their own cage on the paper

- Design the look of the bird

Guide the students to design their own bird on the paper

- What pieces can be used to keep a bird in the cage

Caged Bird

Step 3 Start the Hands-on

Guide the students to build a caged bird and explain the meaning of visual persistence.

Briefly introduce the graphical programming software to the students to guide them through programming

Learn to skillfully set the motor module

Adjust the visual effect by debugging speed values.

Refer to the guidelines to familiarize students with the steps to connect the controller to the computer via a USB cable.

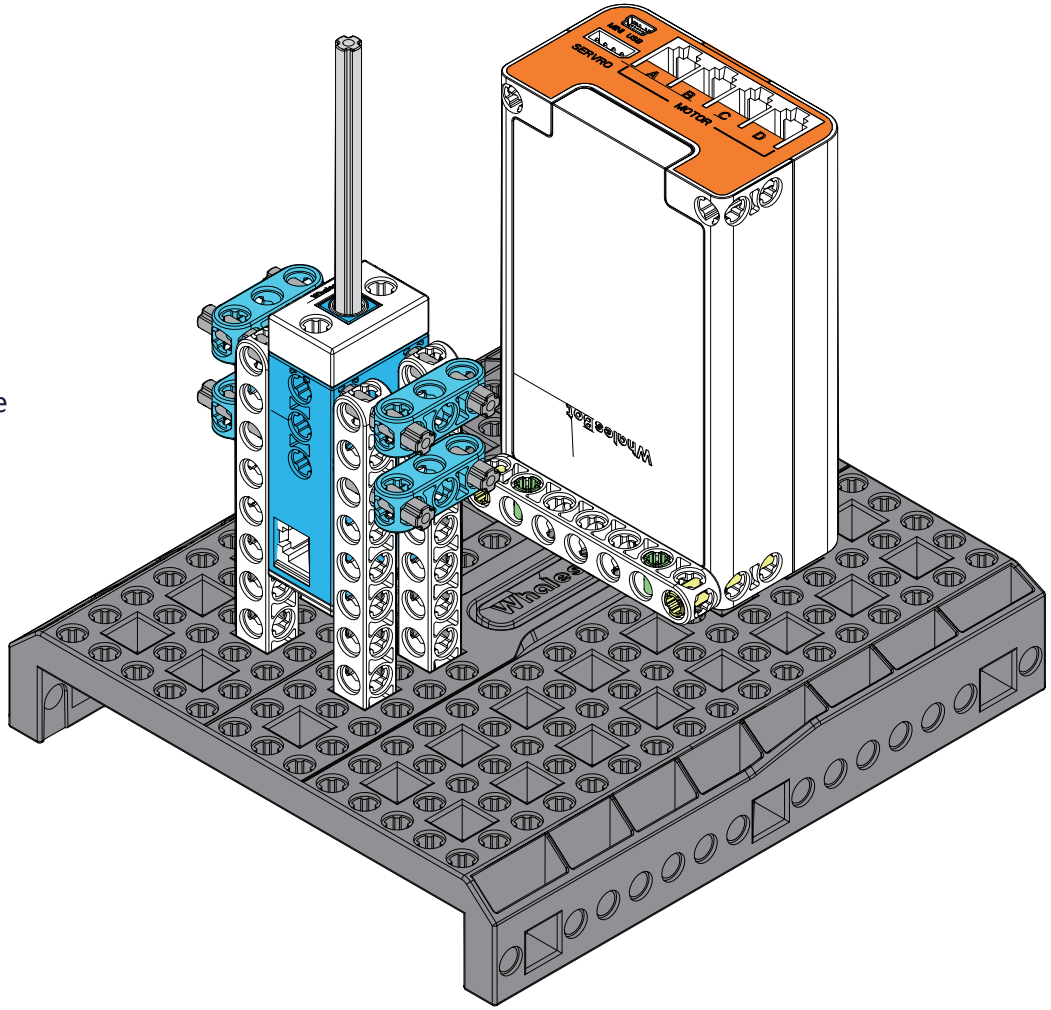

Step 4 Contents Assessment

Post-class summary, which can be reflected by multiple choices or true or false questions as far as possible, other than gap filling or questions

For example, do the caged birds we did today use a visual persistence effect or an auditory persistence effect?

Is the program module learned today setting up the motor, etc., to emphasize the knowledge.

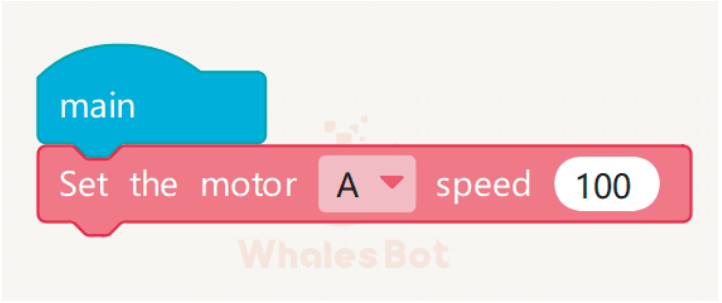

Step 5 Display of Outcomes

Ask the students to present their outcomes to their parents.

Introduce what we did today? Caged bird!

Is it in the cage?

Are we using the visual persistence effect to keep it in the cage?

Caged Bird

1


x4


x4

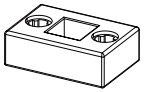
x1

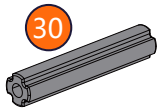

x8

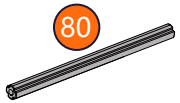

x1

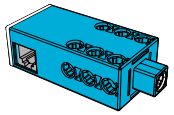
x1

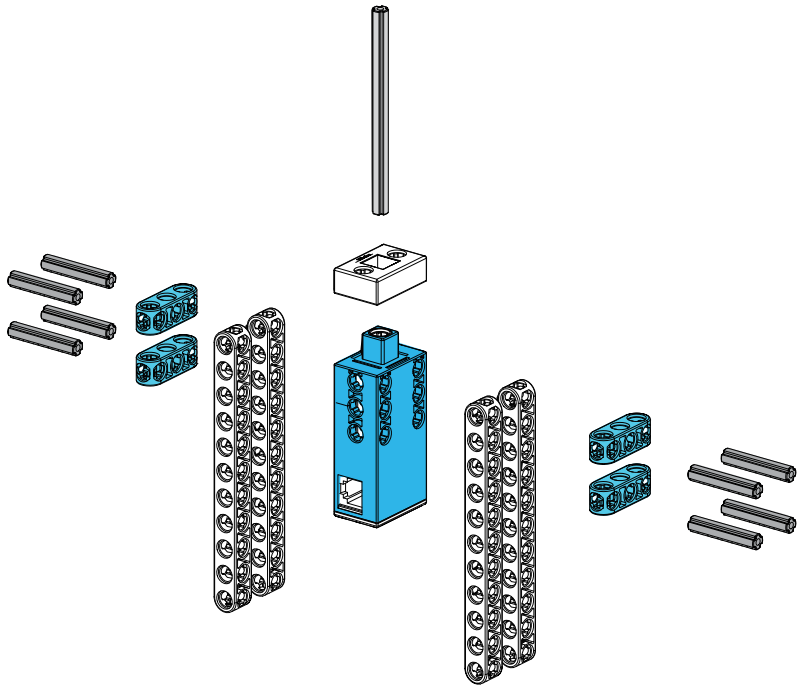

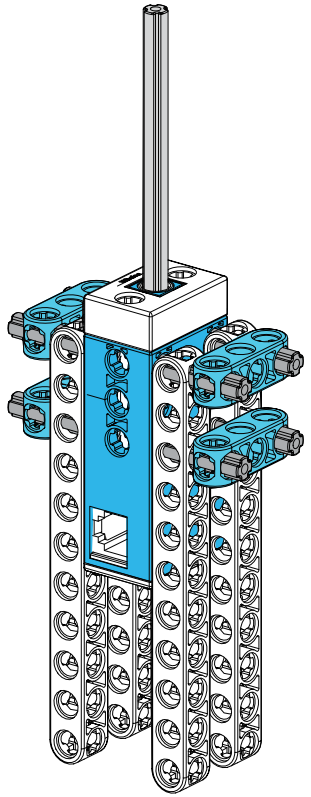

Caged Bird

2

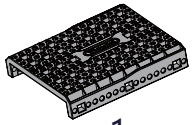

x1

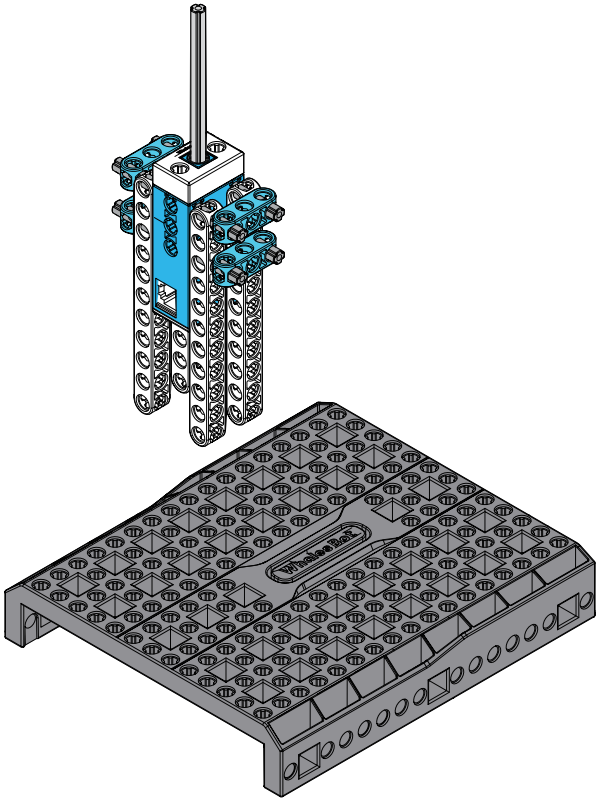

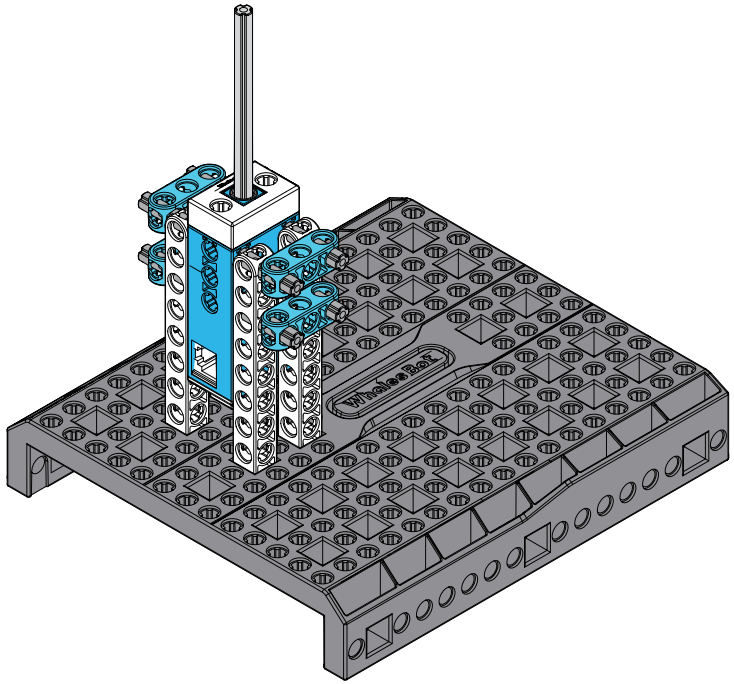

Caged Bird

3

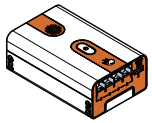
x1


x2

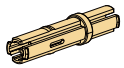
x2

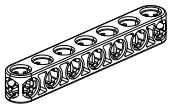
x1

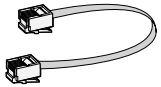
x1

