Balanced Bird

Balanced Bird

Basic Teaching Information					
Teaching facility	AI Module 1	Teaching mode	Project-based learning	Class duration	90 minutes

Teaching Objectives

In this lesson, by learning the course and under the guidance of the teacher, the students shall:

- Know a variety of birds.
- Learn and understand center of gravity, balance and fulcrum
- Skillfully master the building method of teaching aids, structural pieces, etc.

Key Points and Difficulties

•Properly build a balanced bird

•Focus on the application of the principle of leverage

- Correctly understand the principle of balanced bird structure.

Balanced Bird

Step 1 Introduction of the Topic

• In a beautiful forest, one day, the bird brother was on the way home after hunting, Suddenly the wind blew and began to rain. The bird brother' s wings were hurt by the strong wind, and it fell into the grass. Why did it fall?

Ask the students to speak their minds.

• Ask the students have they ever played a balanced bird?

Ask the students to speak their minds.



Step 2 Topic Analysis

• Design the shape of the balanced bird

Guide the students to design their own balanced bird on the blackboard

• What pieces can be used to build such a balanced bird?

• How the balanced birds keep balance?

Balanced Bird

Step 3 Start the Hands-on

Guide the students to build the balanced bird.

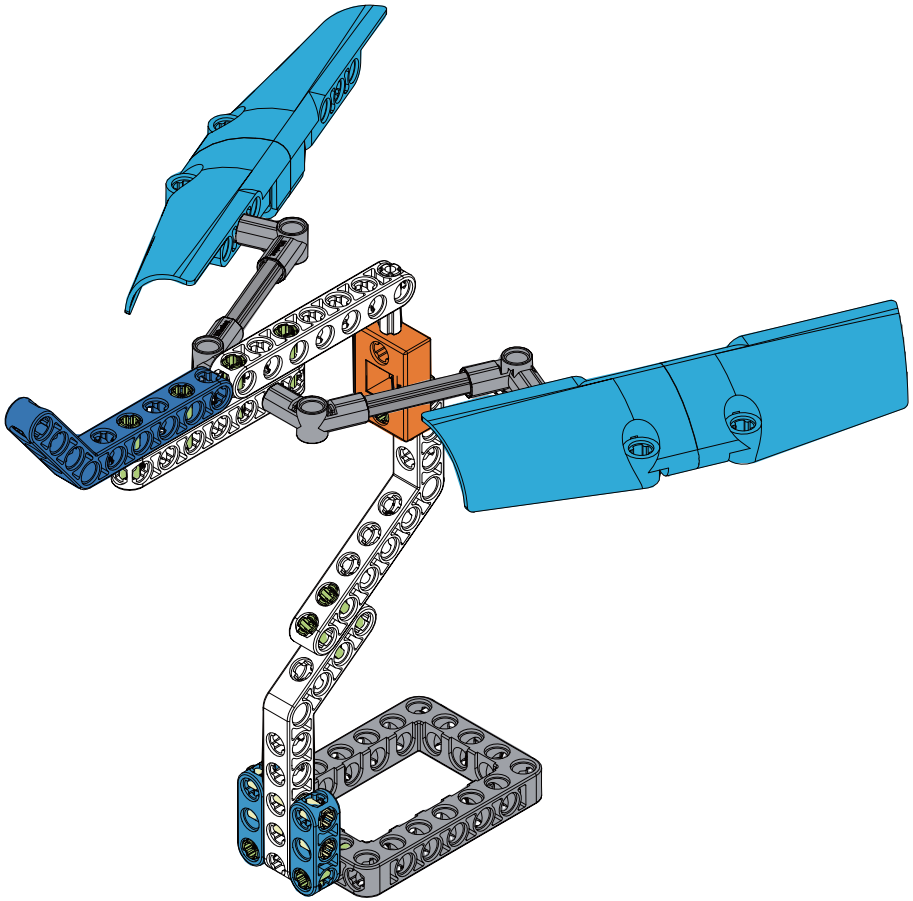

Step 4 Contents Assessment

Post-class summary, which can be reflected by multiple choices or true or false questions as far as possible, other than gap filling or questions.

For example, why the balanced bird we did today can keep balance, etc., to emphasize the knowledge.

Step 5 Display of Outcomes

Ask the students to present their outcomes to their parents.

Introduce what we did today? Balanced bird!

What is used to balance the balance bird? Leverage, center of gravity, etc.

Balanced Bird

1

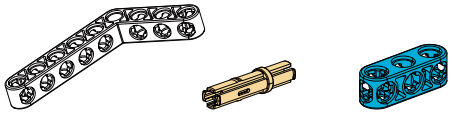

x1 x2 x2

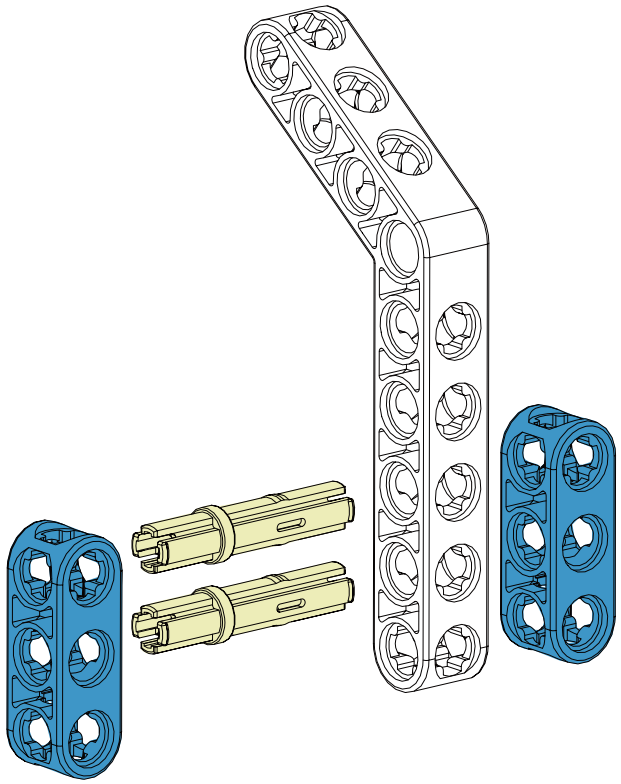

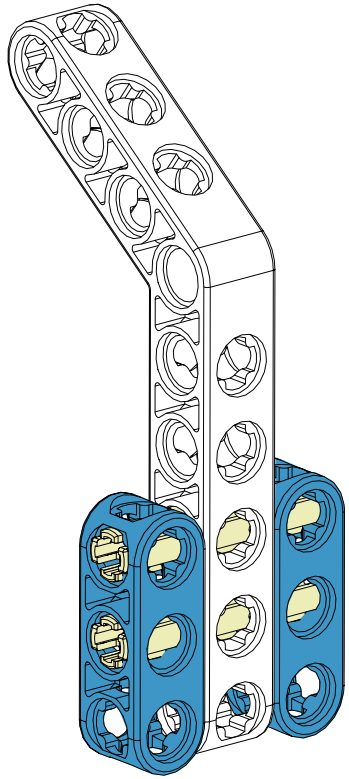

Balanced Bird

2

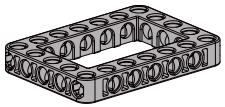

x1

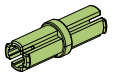

x2

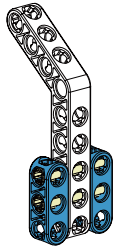

#1

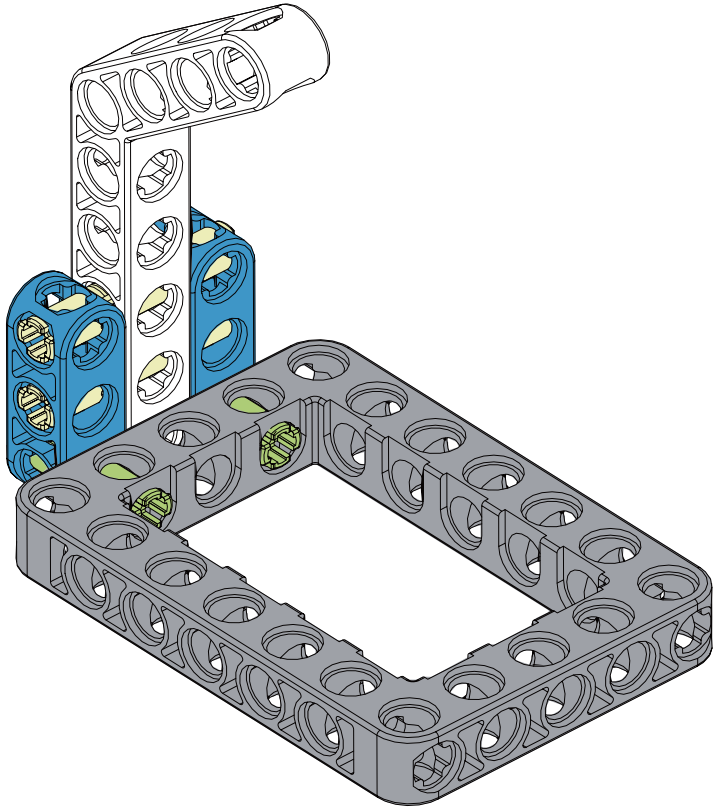

Balanced Bird

3

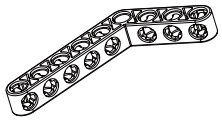
x1

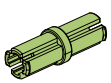
x3

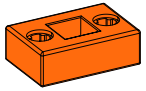
x1

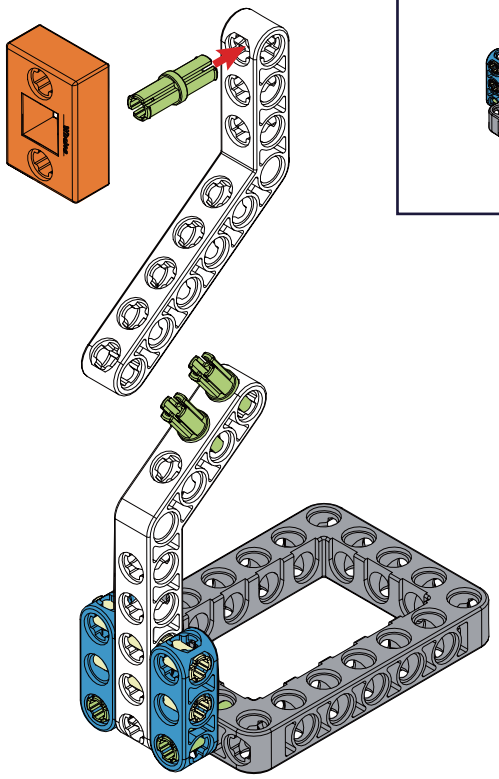

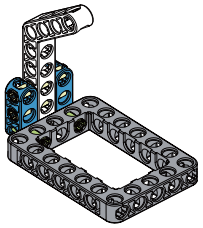
#2

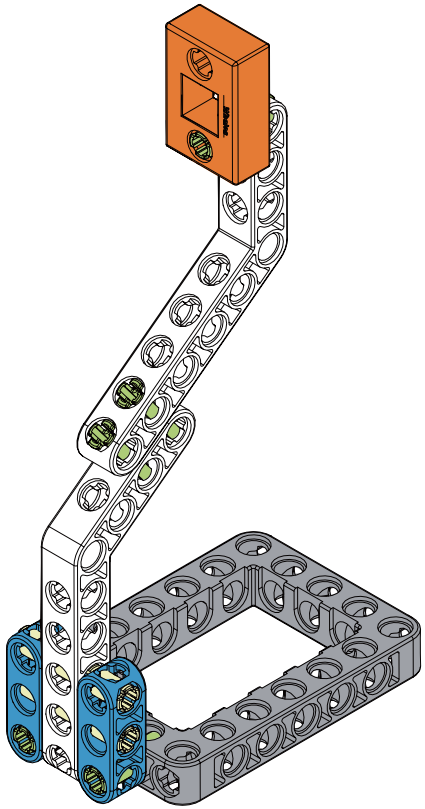

Balanced Bird

4

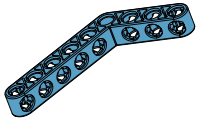
x1

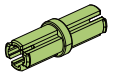
x4

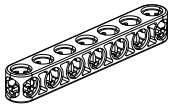
x2

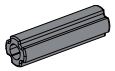
x1

20

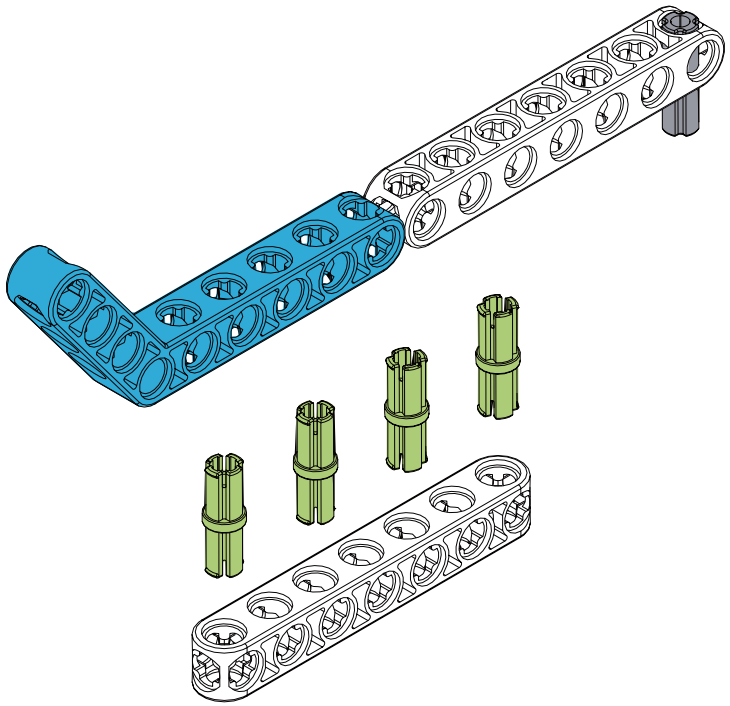

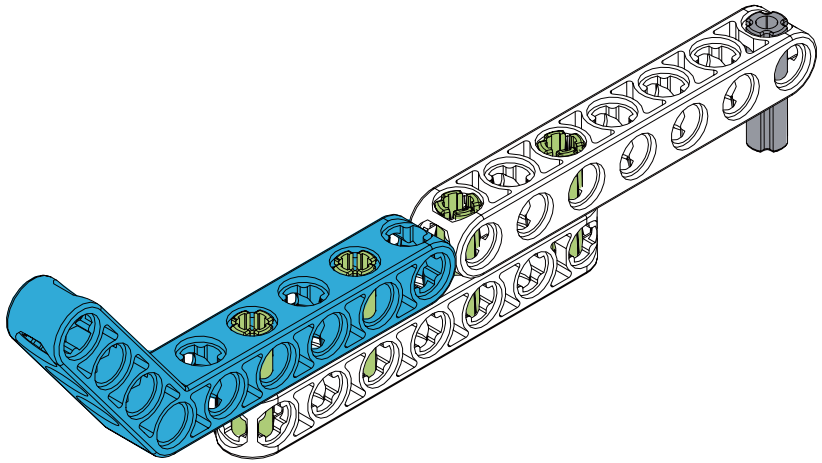

Balanced Bird

5

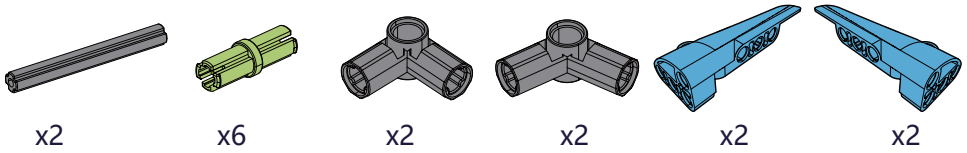

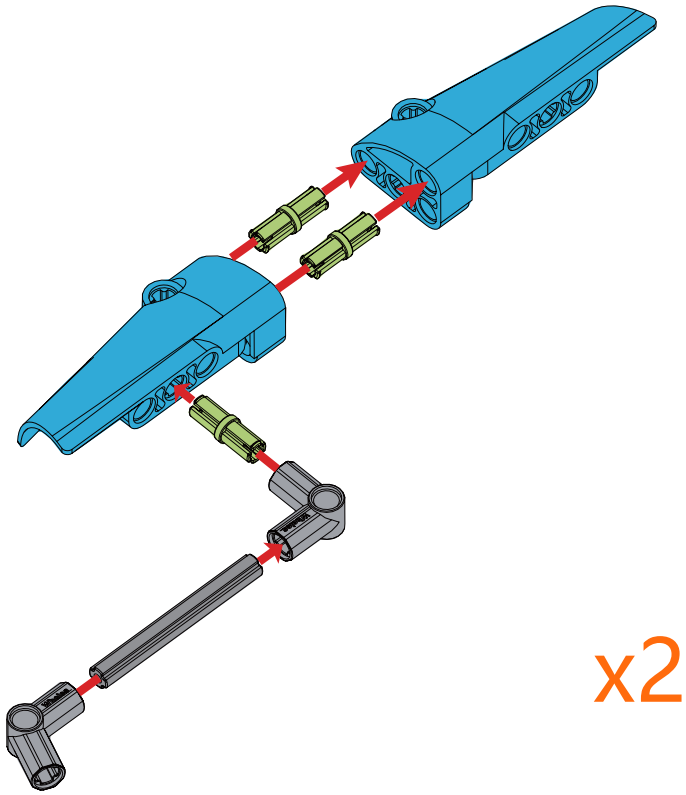

x2

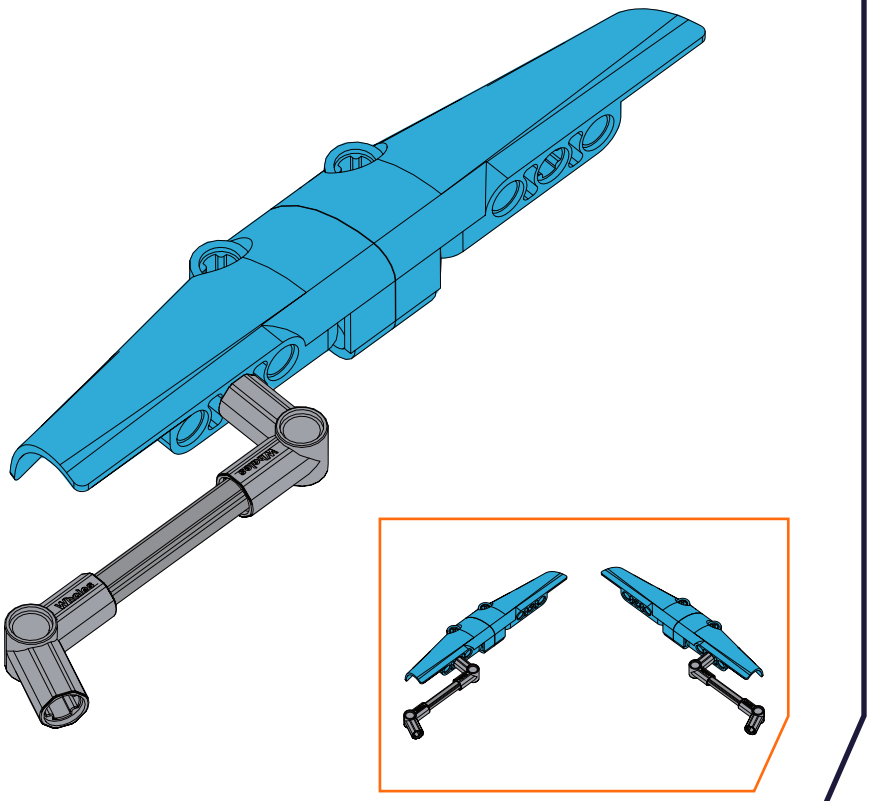

Balanced Bird

6

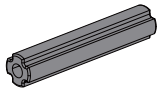

x1

