Dancing Music Box

Dancing Music Box

Basic Teaching Information					
Teaching facility	AI Module 1	Teaching mode	Project-based learning	Class duration	90 minutes

Teaching Objectives

In this lesson, by learning the course and under the guidance of the teacher, the students shall:

- Know the dancing music box.
- Learn and understand the structure of the link mechanism and gear transmission
- Application and learning of closed loop motor

Key Points and Difficulties

- Correctly build the linkage and gear transmission
- Focus on the fixed distance and building sequence of the link
- Focusing on mastering the use of action programming directive blocks.
- Understanding the sequential structure of programming correctly.

Dancing Music Box

Step 1 Introduction of the Topic

- One day, Teacher Chunchun and his friends had an appointment to have dinner at 5 pm. When she passed a stationery store, he found something that would dance and make music. Guess what it is?

Ask the students to speak their minds.

- Ask the students have they ever seen a dancing music box?

Ask the students to speak their minds.



Step 2 Topic Analysis

- Design the shape of the dancing music box

Guide the students to design their own dancing music box on the blackboard

- How does the dancing music box work
- What pieces can be used to build such a dancing music box
- What do you need to make the dancing music box rotate

Step 3 Start the Hands-on

Guide the students to build a dancing music box and explain the gearing structure therein.

Briefly introduce students to graphical programming software to guide students through programming

Learn to skillfully set the motor module

Adjust the dancing music box's speed by debugging the speed value.

Refer to the guidelines to familiarize students with the steps to connect the controller to the computer via a USB cable.

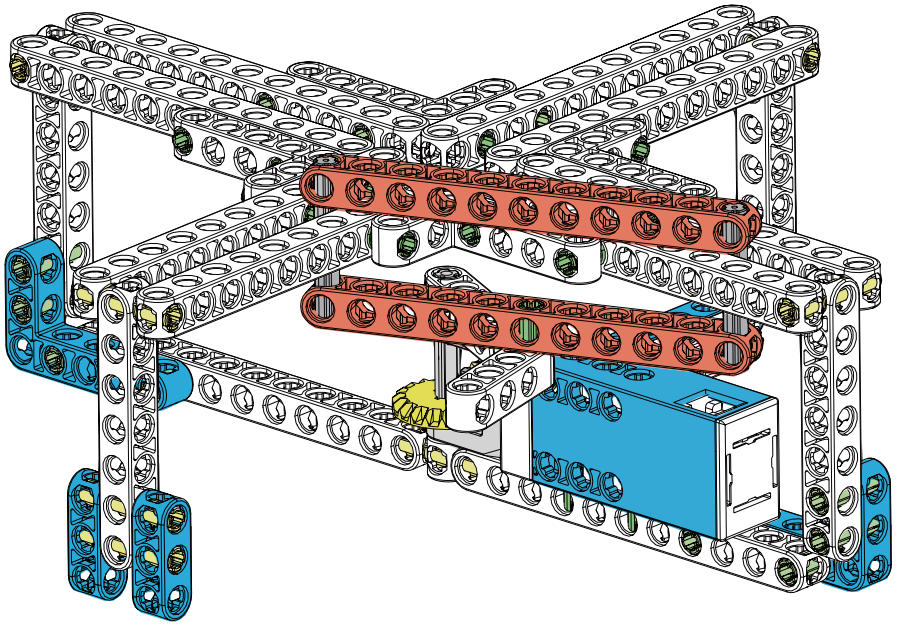

Step 4 Contents Assessment

Post-class summary, which can be reflected by multiple choices or true or false questions as far as possible, other than gap filling or questions

For example, is the dancing music box' s gearing we did today using a lever or a linkage?

Step 5 Display of Outcomes

Ask the students to present their outcomes to their parents.

Introduce what we did today? A dancing music box!

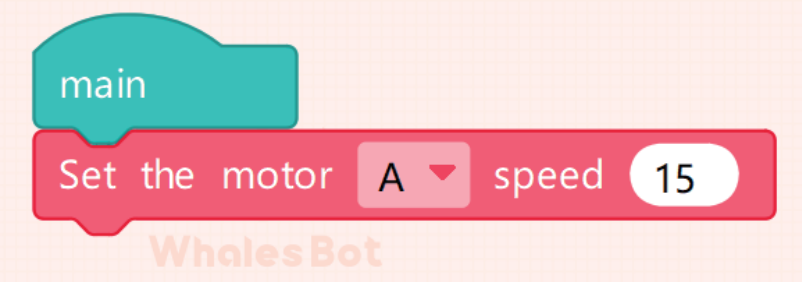

Dancing Music Box

1

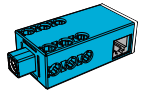
x1

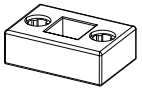
x1

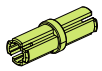
x2

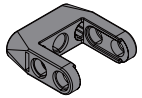
x1

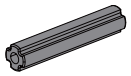
x1


x1

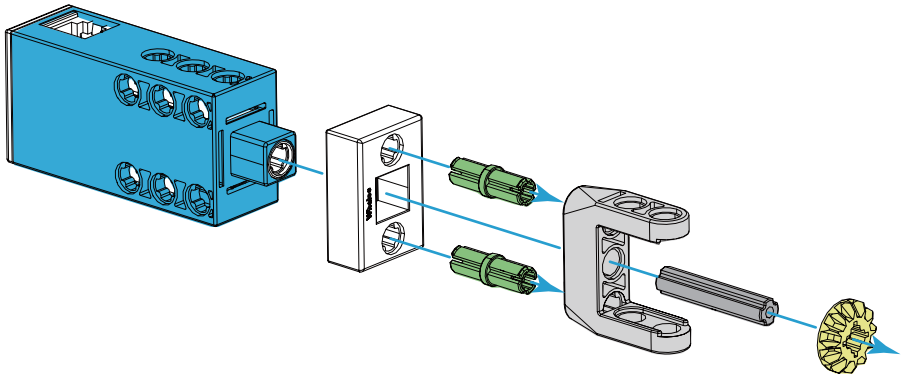

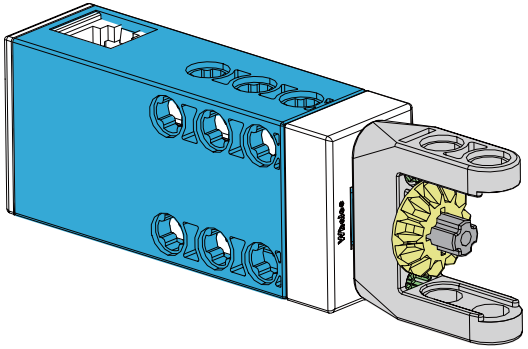

Dancing Music Box

2



x3

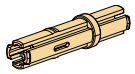

x1

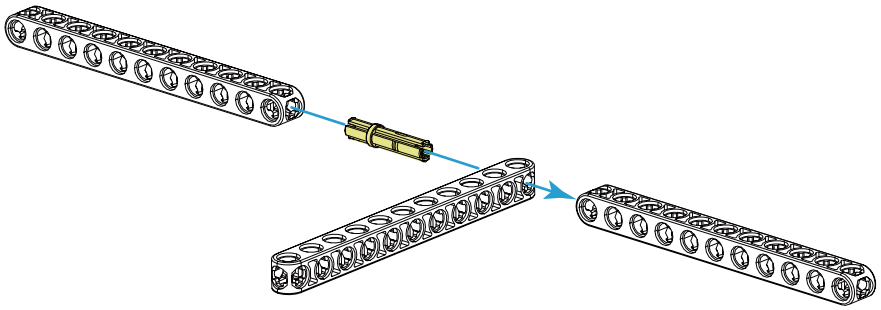

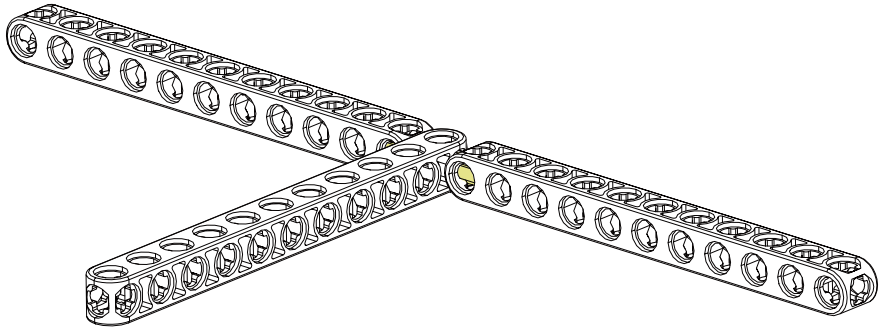

Dancing Music Box

3


x2

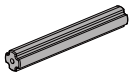
x1

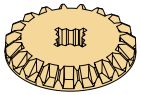
x1

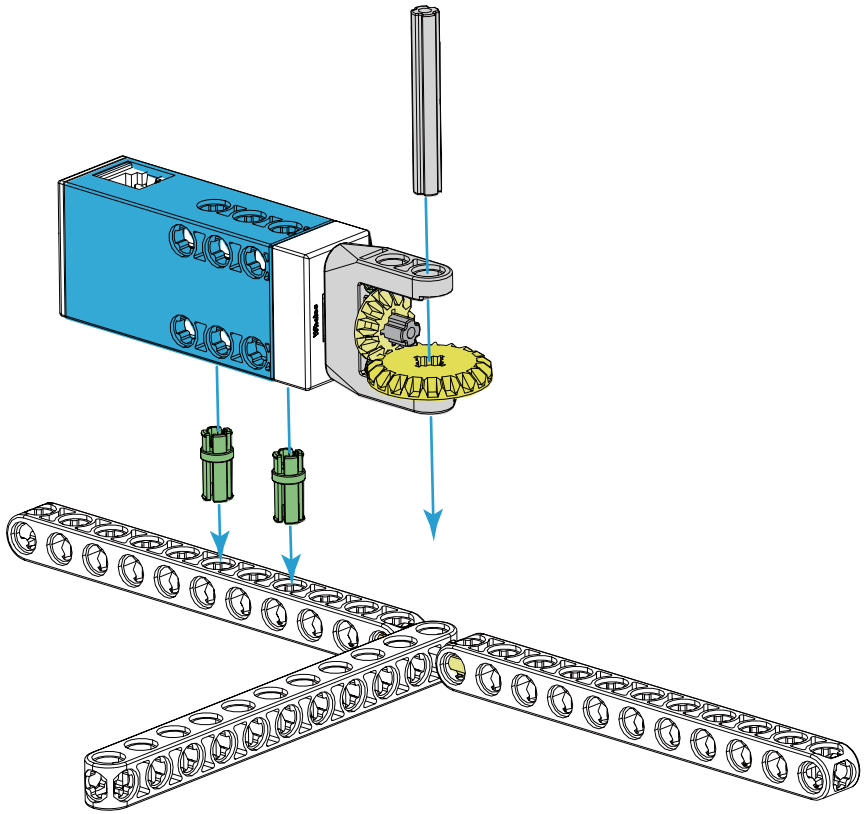

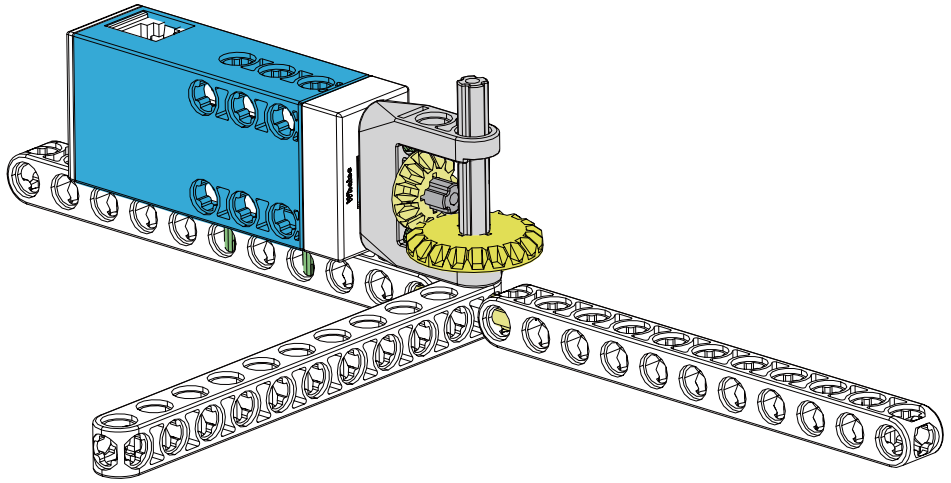

4

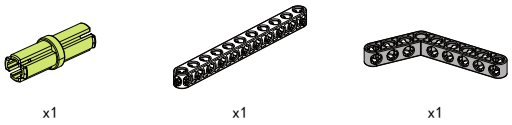

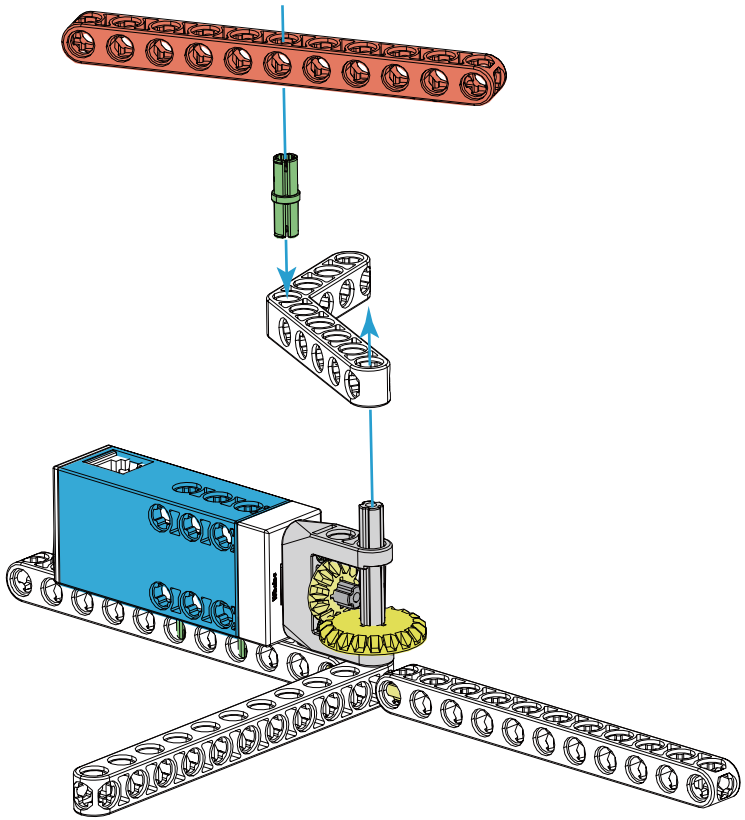

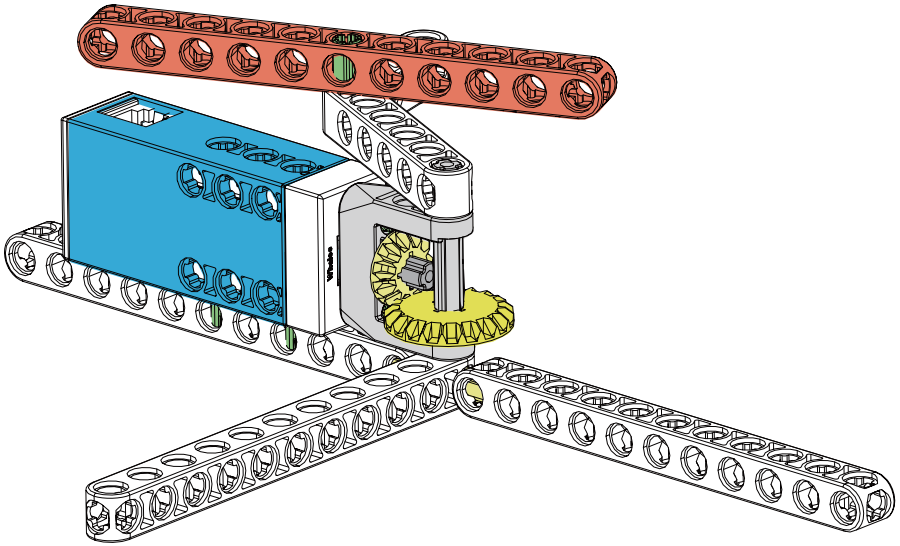

Dancing Music Box

5


x8

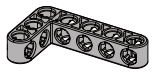
x4

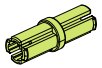
x16

x4

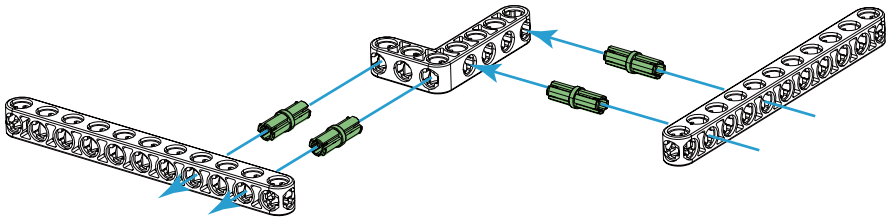

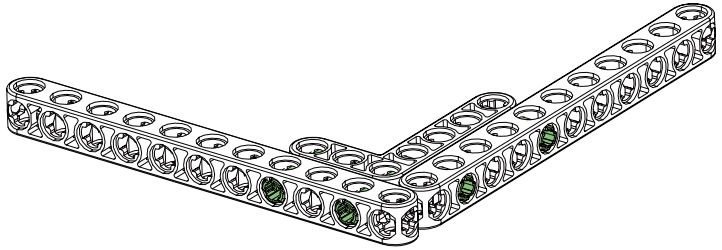

6

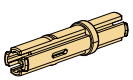
x2

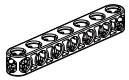
x2

x2

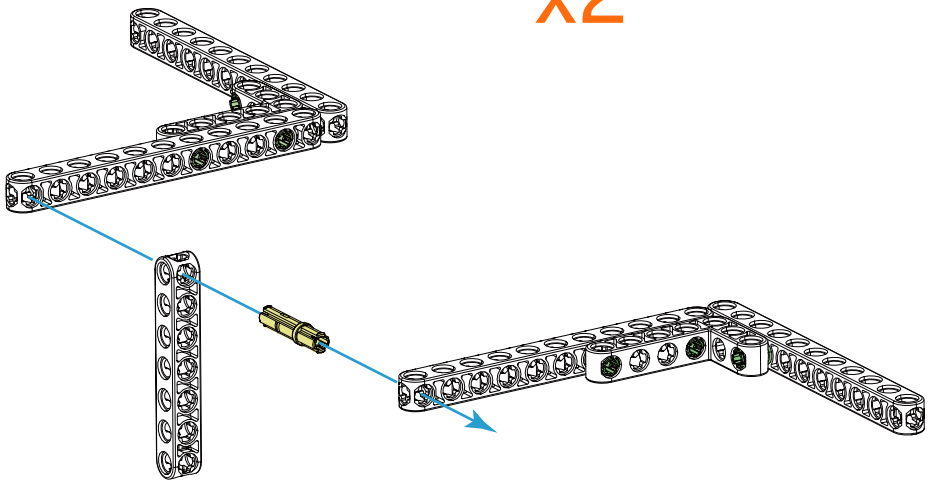

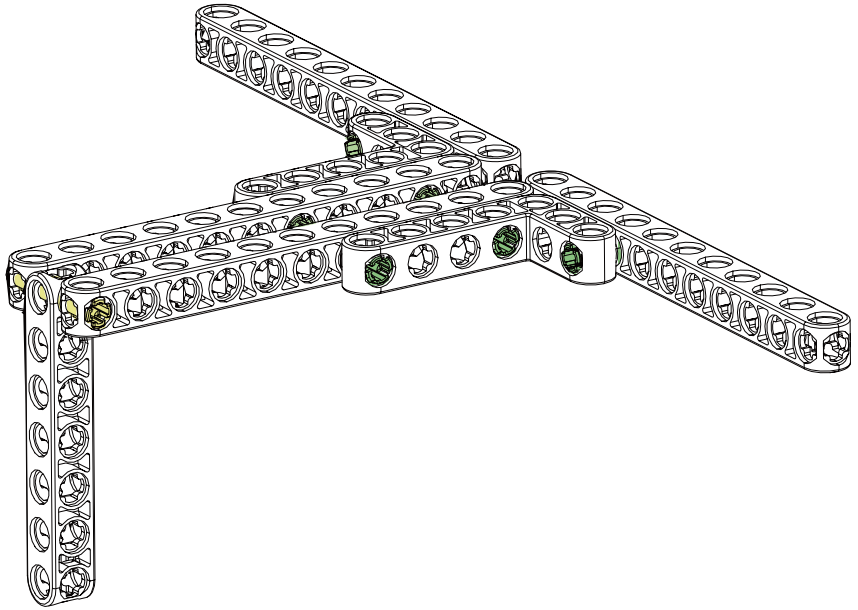

Dancing Music Box

7

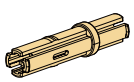

x2



x2

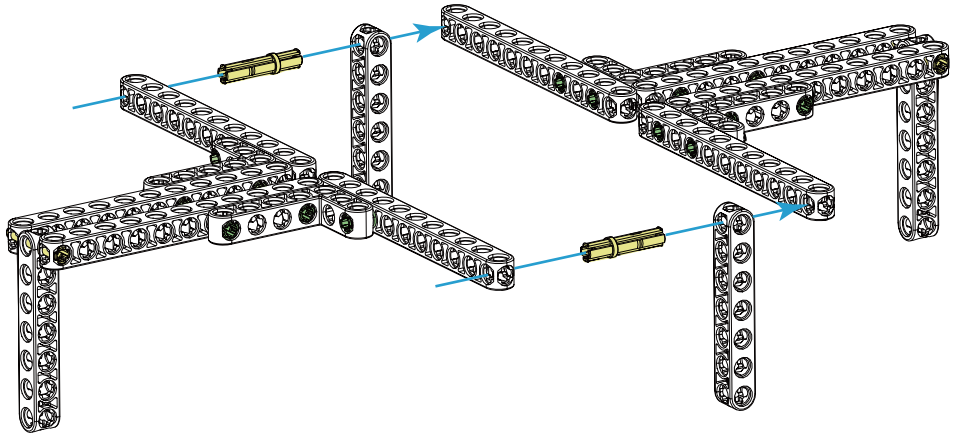

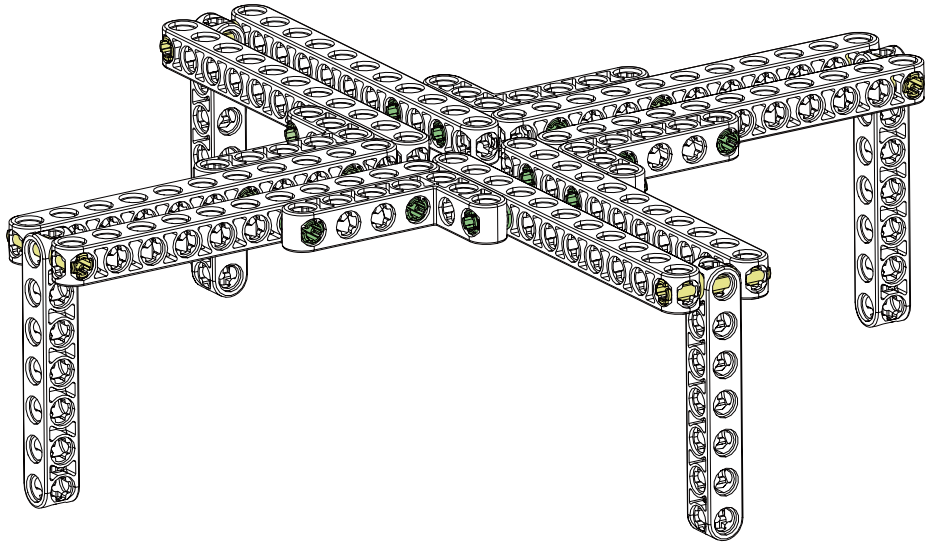

8

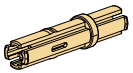
x2


x2

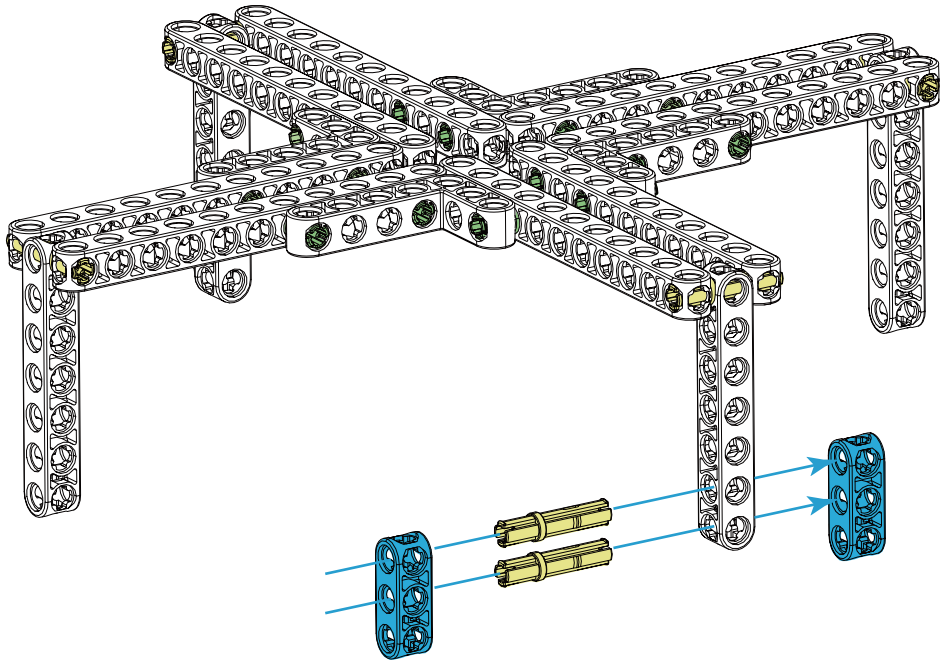

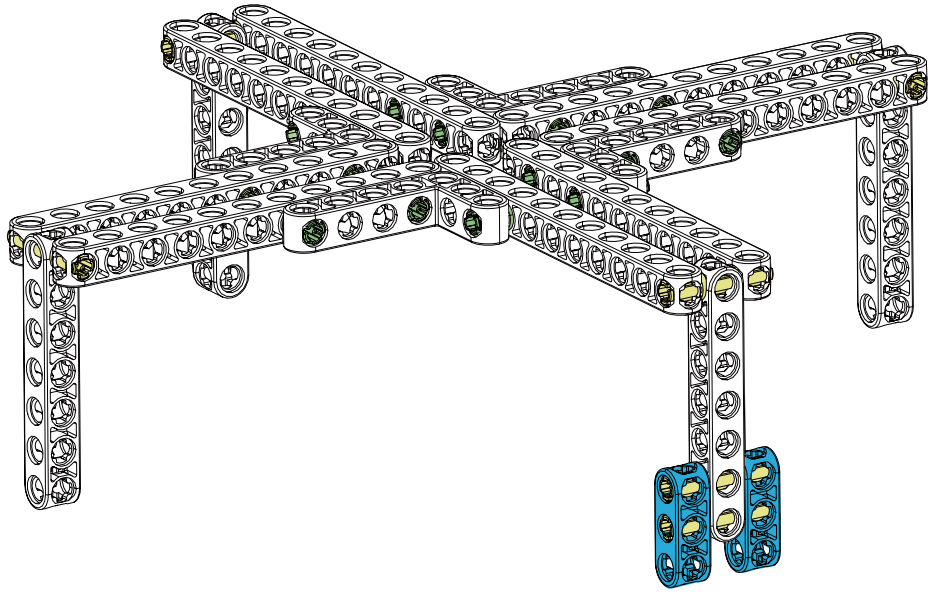

9

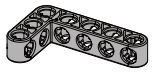
x3

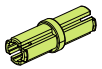
x12

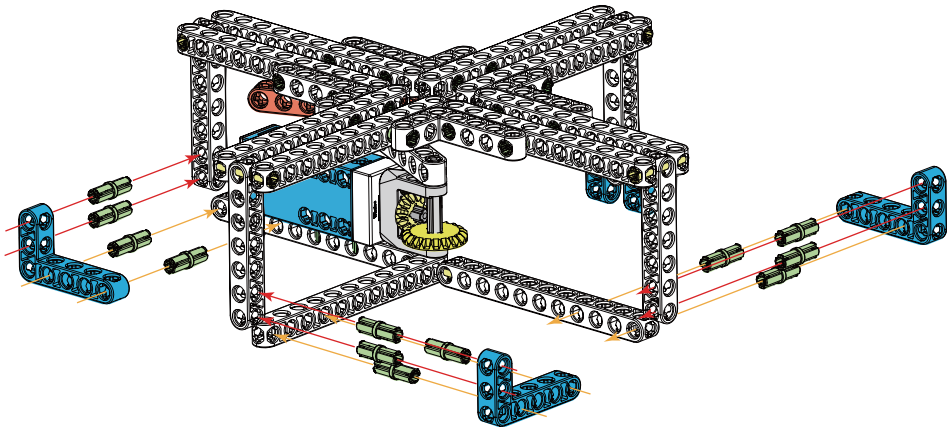

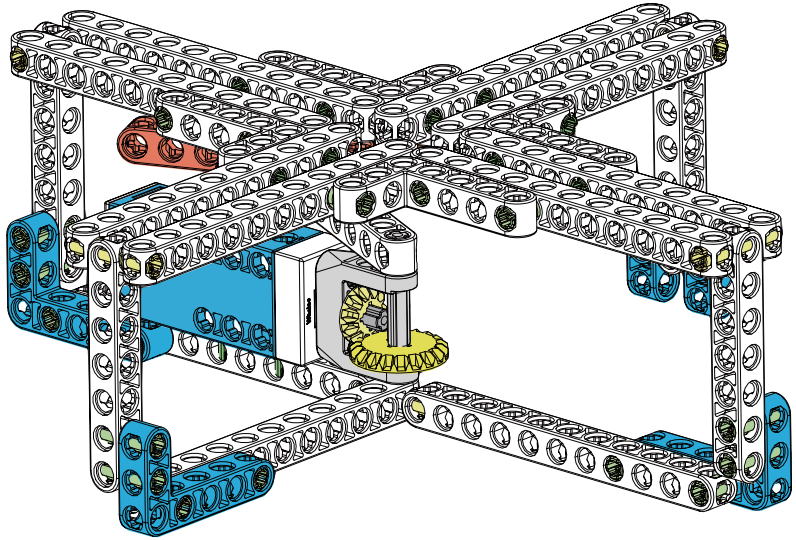

Dancing Music Box

10


x2

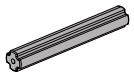
x2

