Forklift

Forklift

Basic Teaching Information					
Teaching facility	AI Module 1	Teaching mode	Project-based learning	Class duration	90 minutes

Teaching Objectives

In this lesson, by learning the course and under the guidance of the teacher, the students shall:

- Know the forklift.
- Know the rack and learn the application of rack
- Apply and learn the closed loop motor

Key Points and Difficulties

- Correctly build the lifting structure of forklift
- Focusing on occlusion of the key rack and gear
- Focusing on mastering the use of motion programming blocks.
- Understanding the sequential structure of programming correctly.

Step 1 Introduction of the Topic

- Boys and girls, today I have a question for you and let' s see who is the smartest!

In a large warehouse of a shopping mall, the warehouse keeper needs to put the new arrivals on very high shelves, but the keeper is neither strong, nor as high as the shelves. What should he do? Can you help him out?

Climb up with a ladder and put / he may put the arrivals not as that high...

It seems that your solutions are not quite enough. I have a different method. Do you know a very powerful vehicle that can lift the heaviest articles easily? That is -- a forklift.

Ask the students to speak their minds.

- Ask the students have they ever seen a forklift?

Ask the students to speak their minds.

Step 2 Topic Analysis

- Design the shape of the forklift

Guide the students to design their own wiper on the blackboard

- How does the forklift work
- How many forks does a forklift have
- What pieces can be used to build a forklift
- What does the lifting fork need?

Step 3 Start the Hands-on

Guide the students to build a forklift and explain the gearing structure therein.

Briefly introduce the graphical programming software to the students to guide them through programming

Learn to skillfully set the motor module

By debugging the speed value, adjust the lifting speed and moving speed of the forklift.

Refer to the guidelines to familiarize students with the steps to connect the controller to the computer via a USB cable.

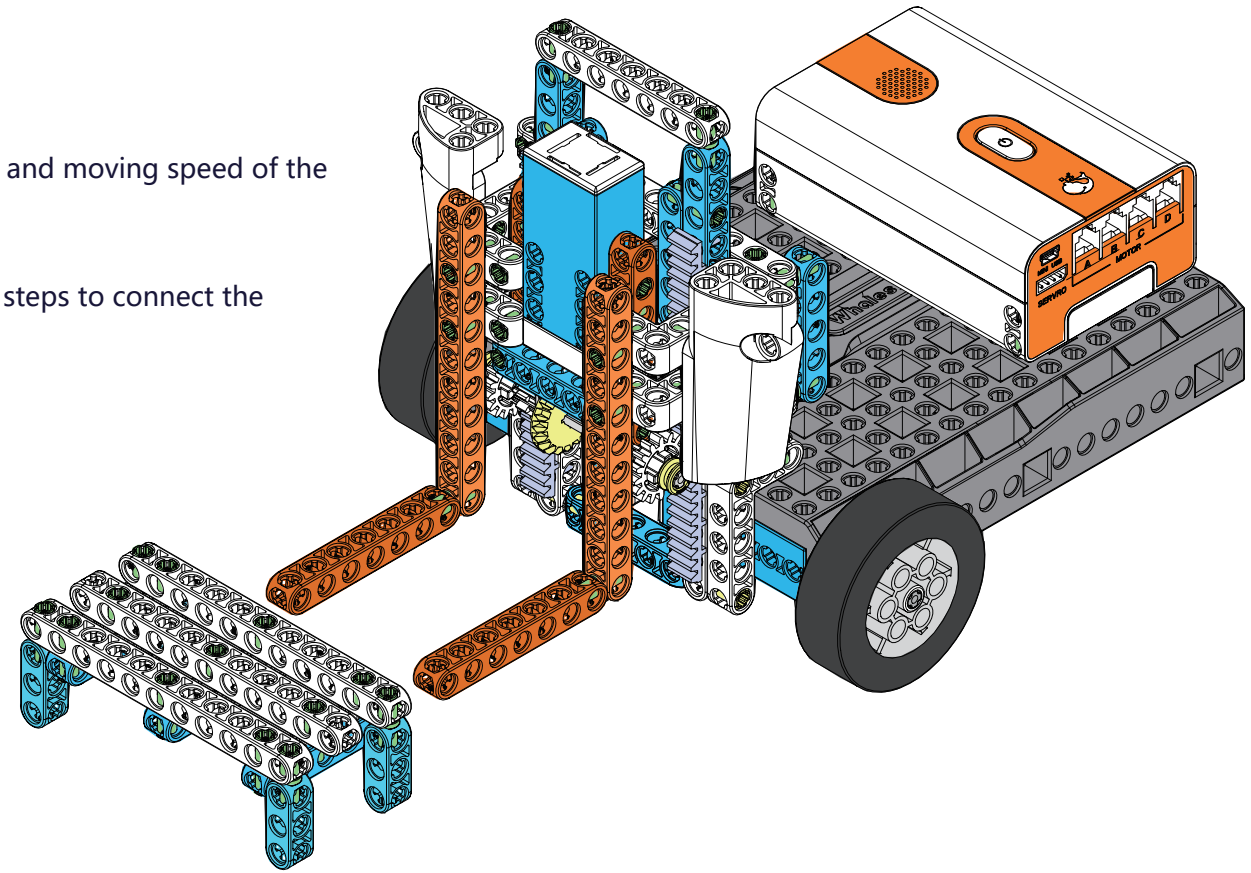

Step 4 Contents Assessment

Post-class summary, which can be reflected by multiple choices or true or false questions as far as possible, other than gap filling or questions

For example, is gearing of the oscillating fan we made today using a lever or a linkage?

Step 5 Display of Outcomes

Ask the students to present their outcomes to their parents.

Introduce what we did today? An oscillating fan!

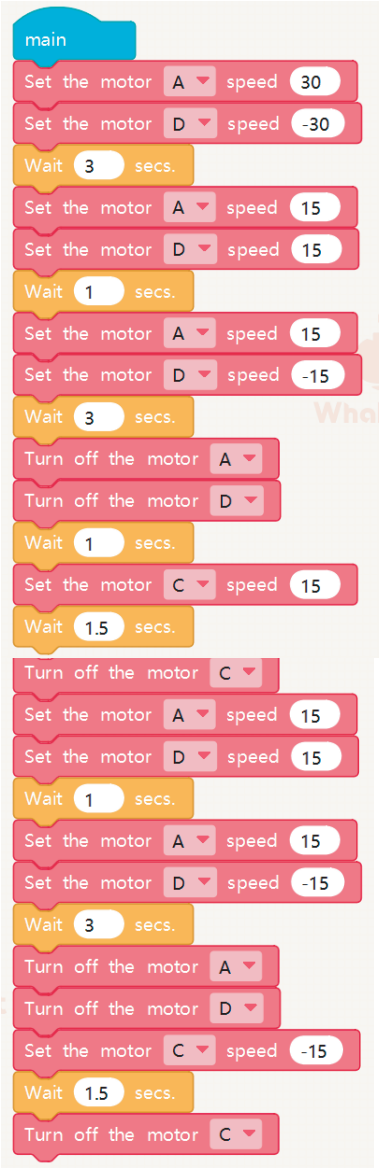

Forklift

1

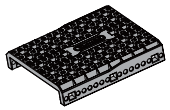
x1

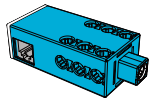
x2

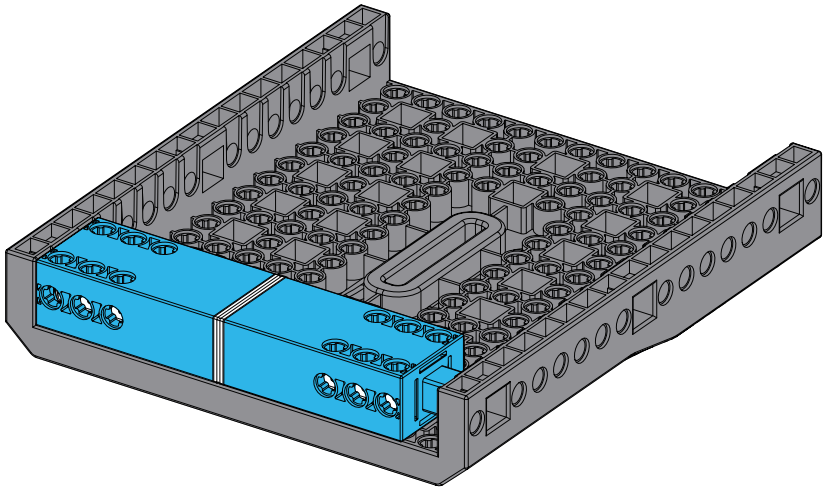

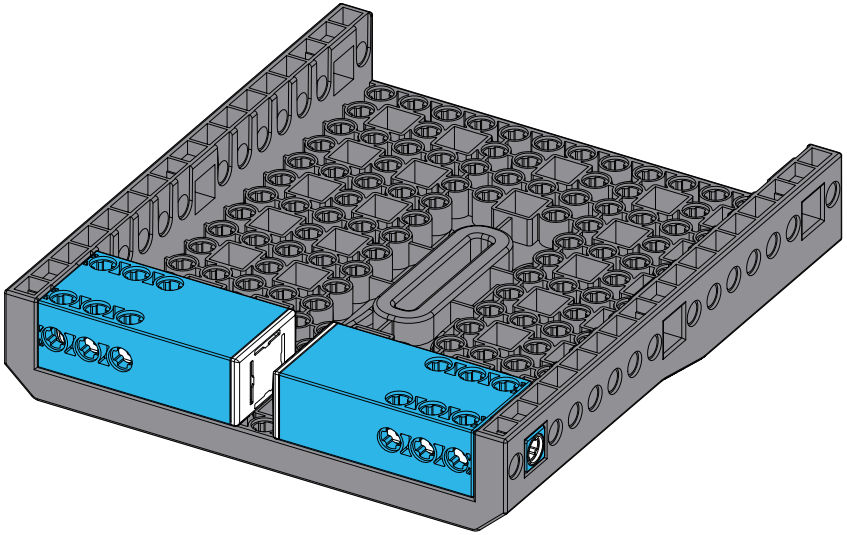

2

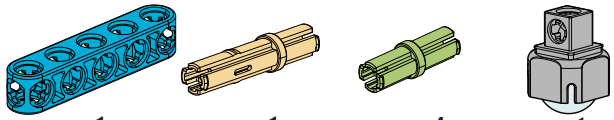

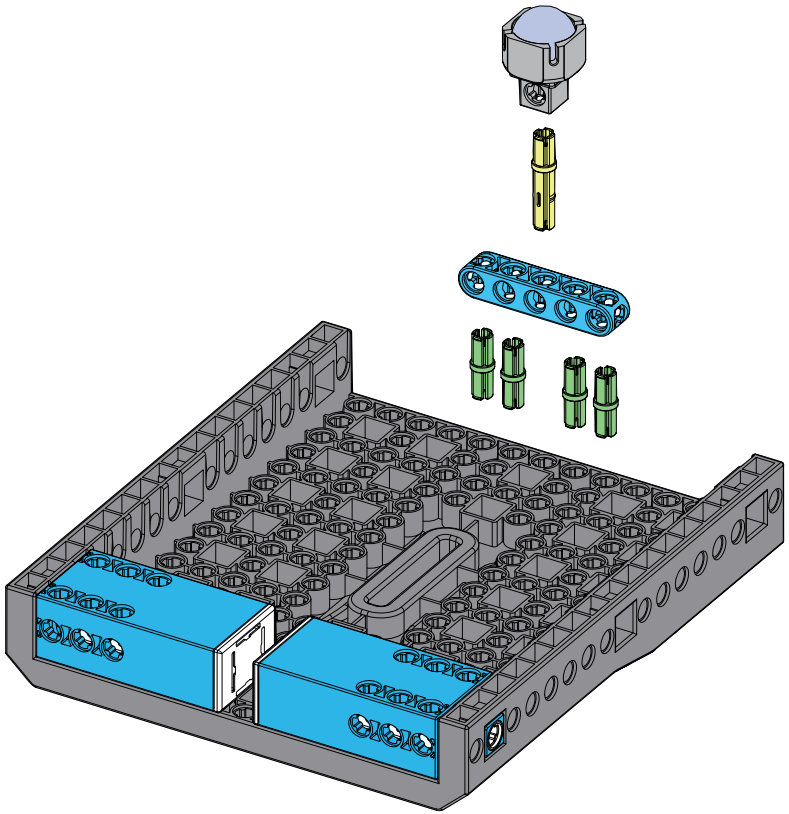

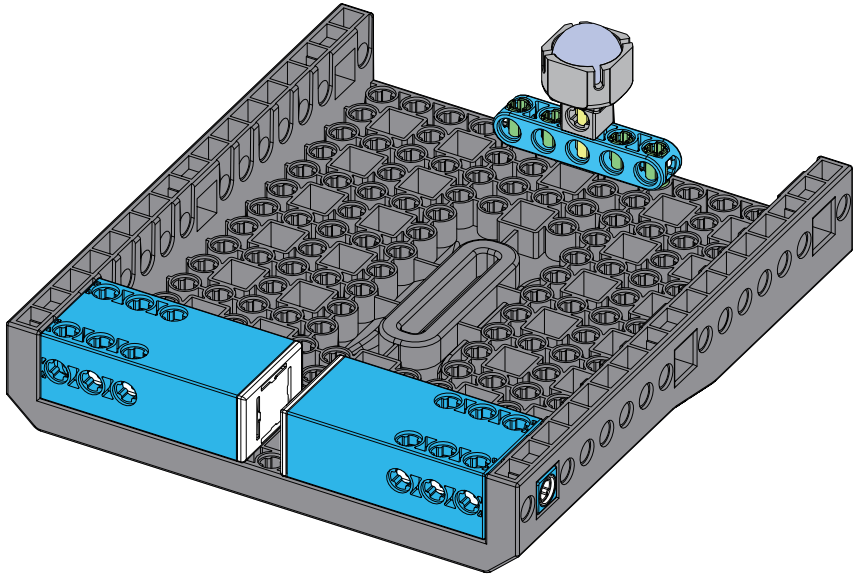

Forklift

3

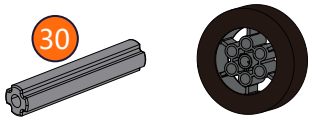

x2

x2

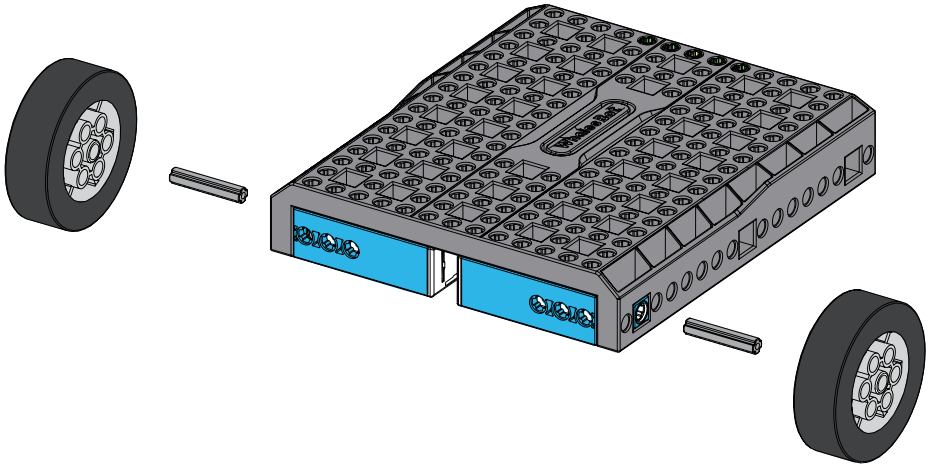

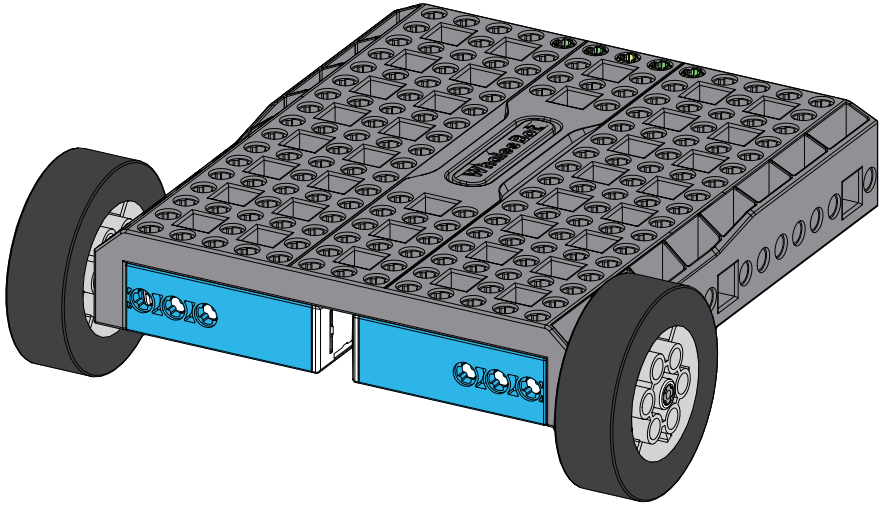

4

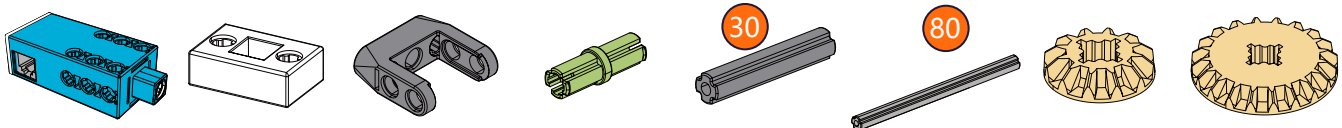

x1 x1 x1 x2 x1 x1 x1 x1

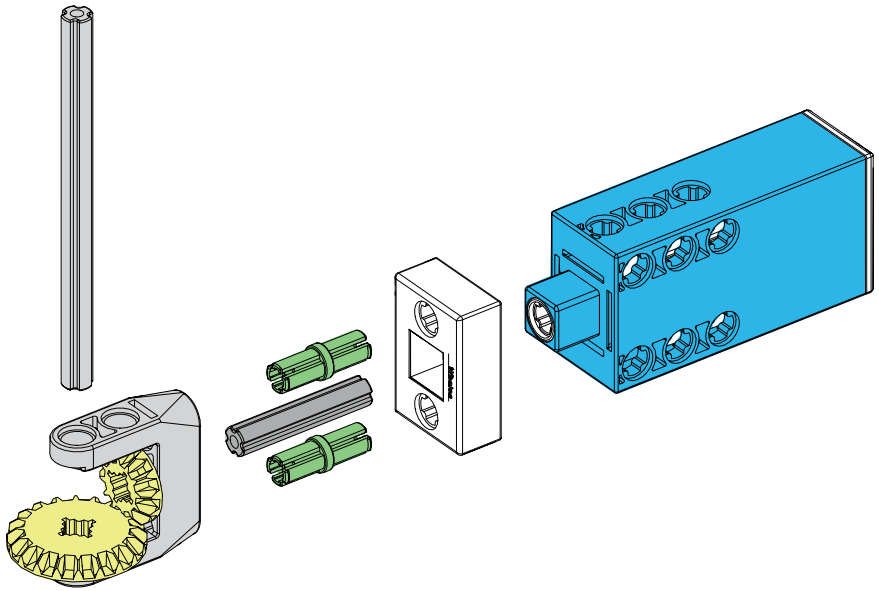

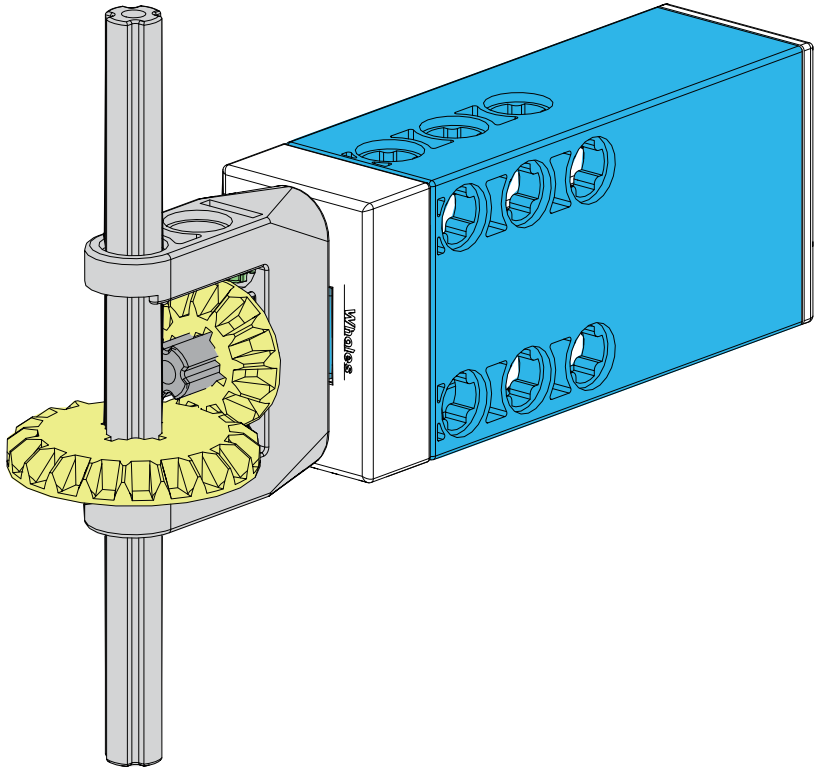

Forklift

5

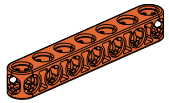

x2



x6

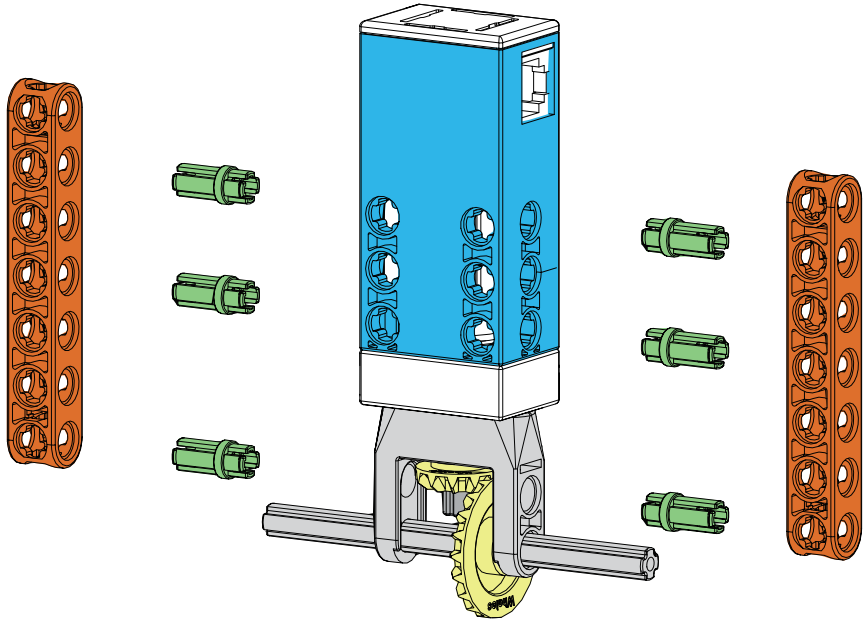

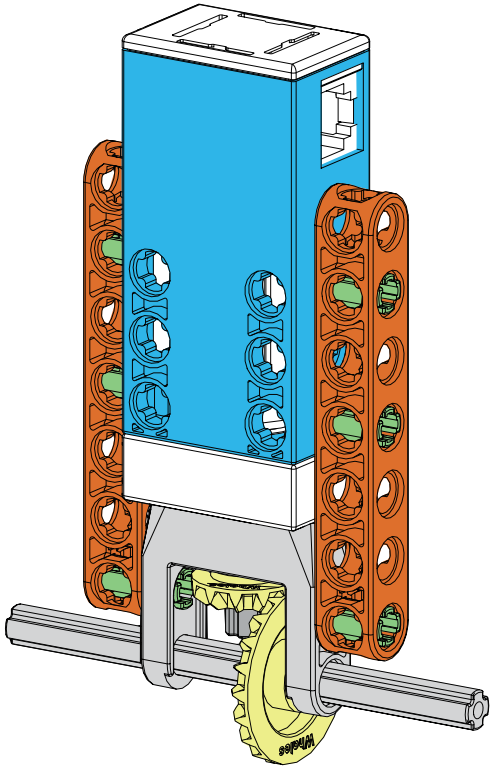

Forklift

6

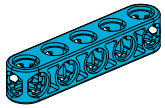
x1


x2

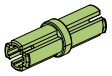
x2

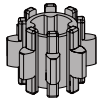
x2

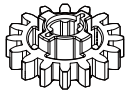
x2

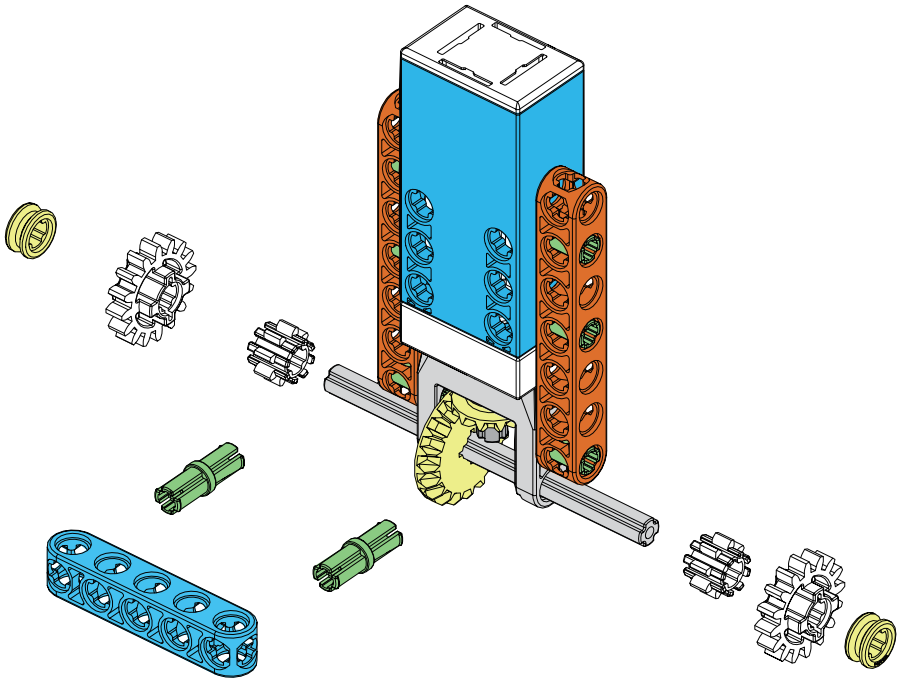

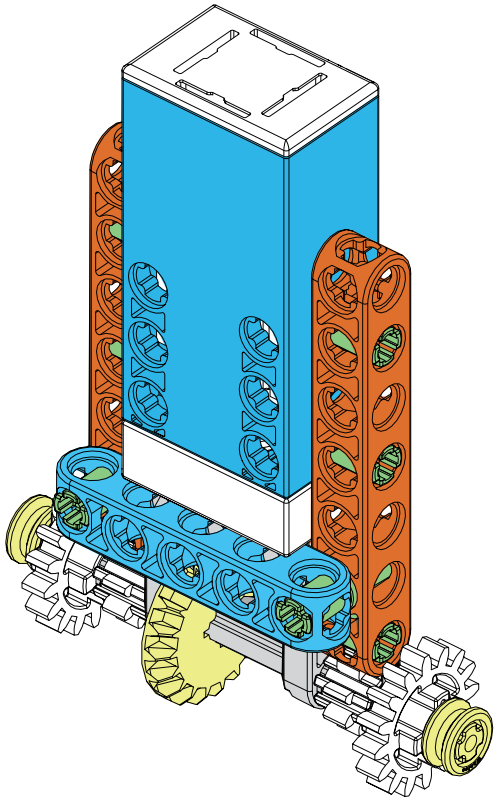

7

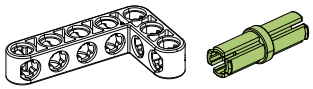

x4

x4

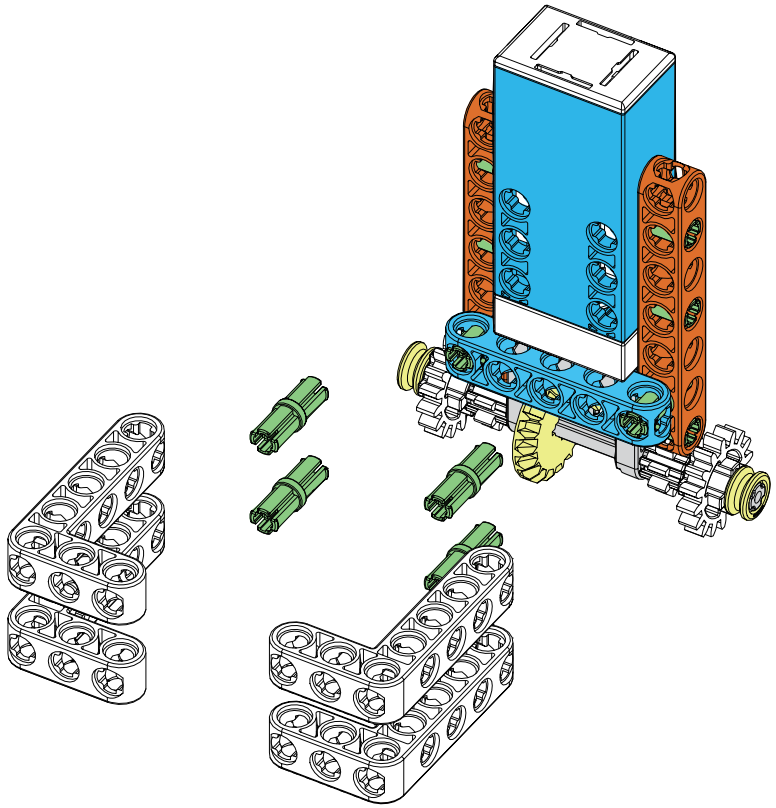

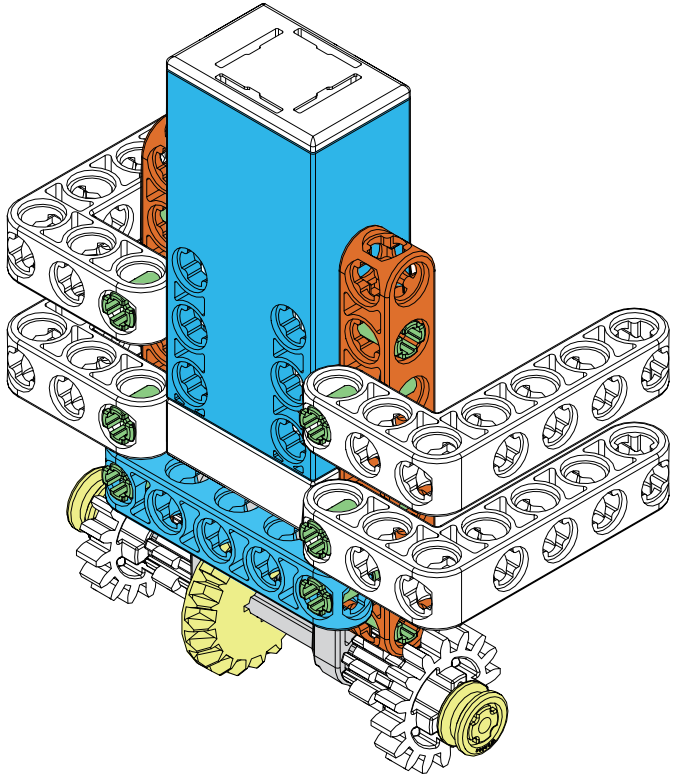

8

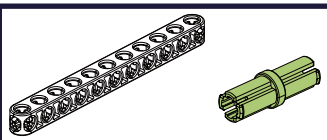

x2 x4

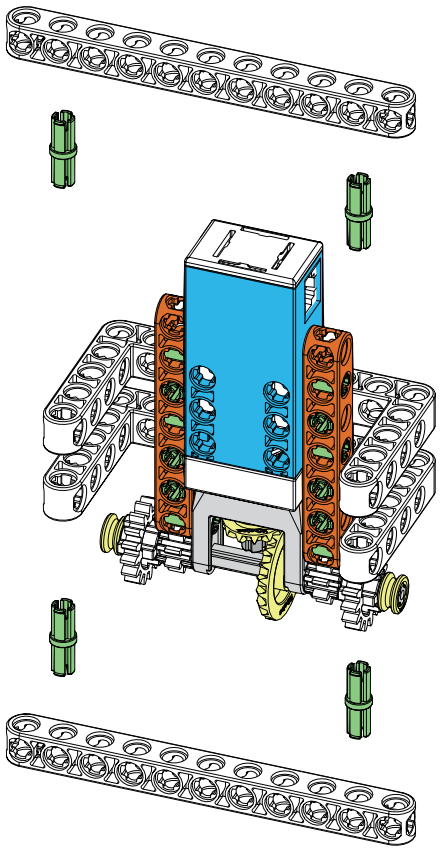

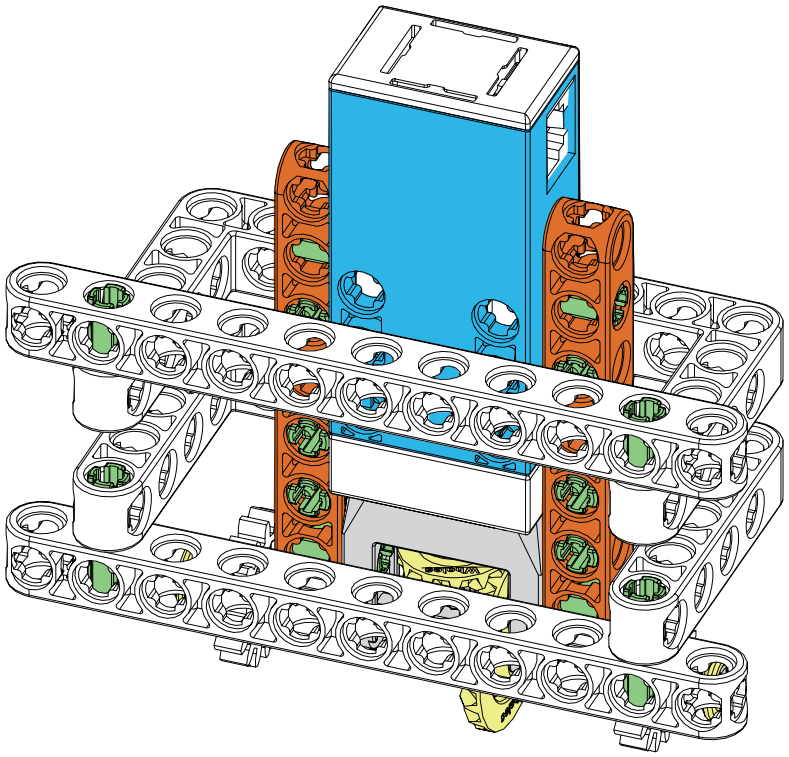

9

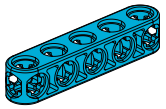

x2

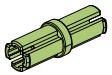

x4

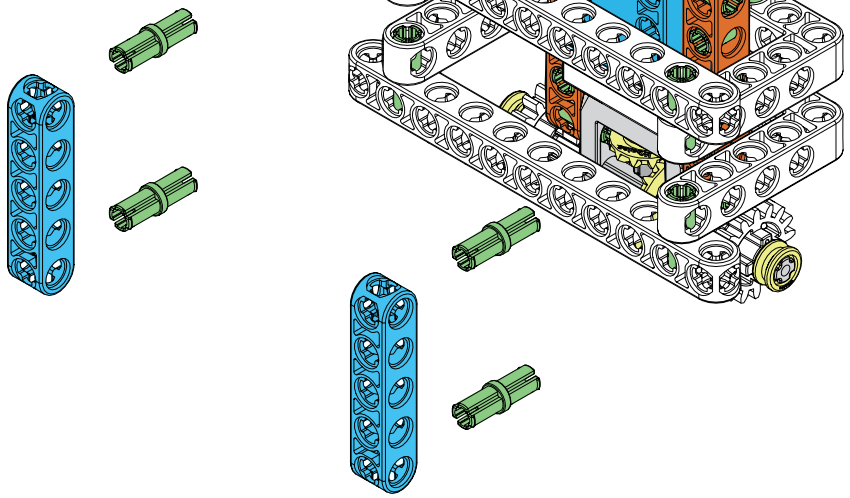

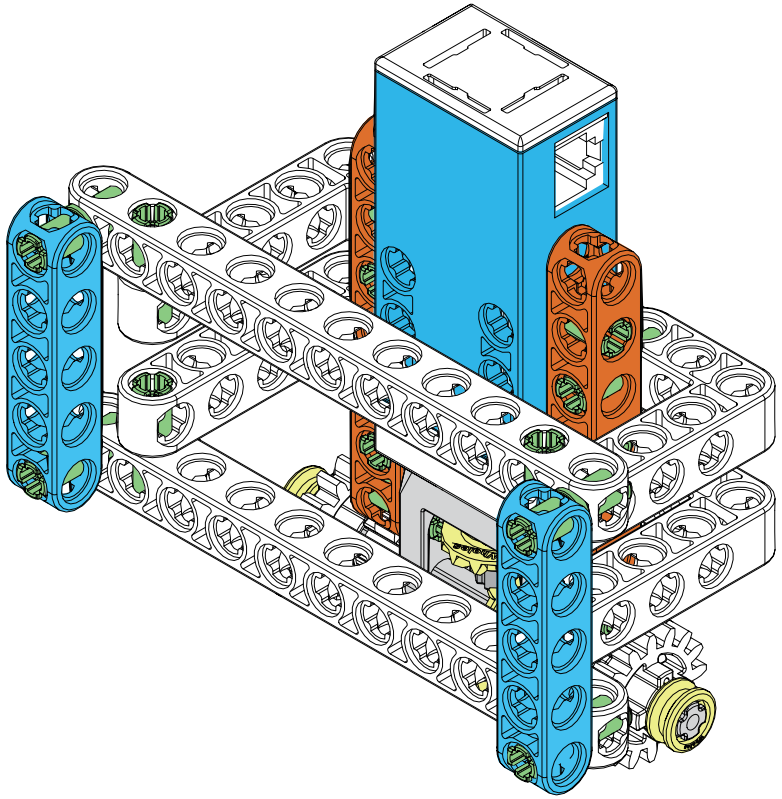

Forklift

10



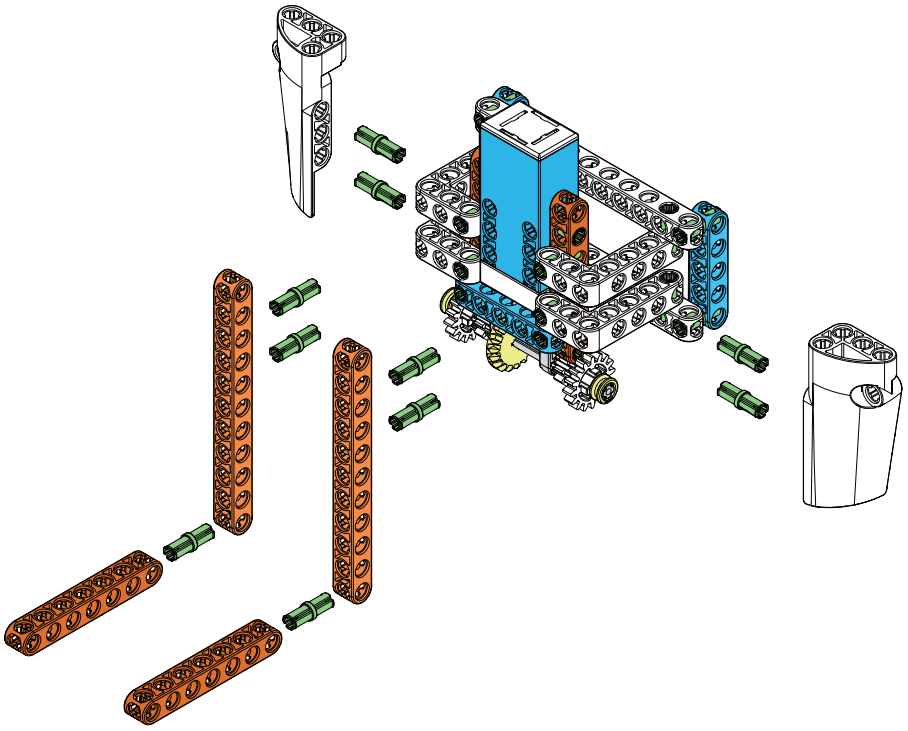

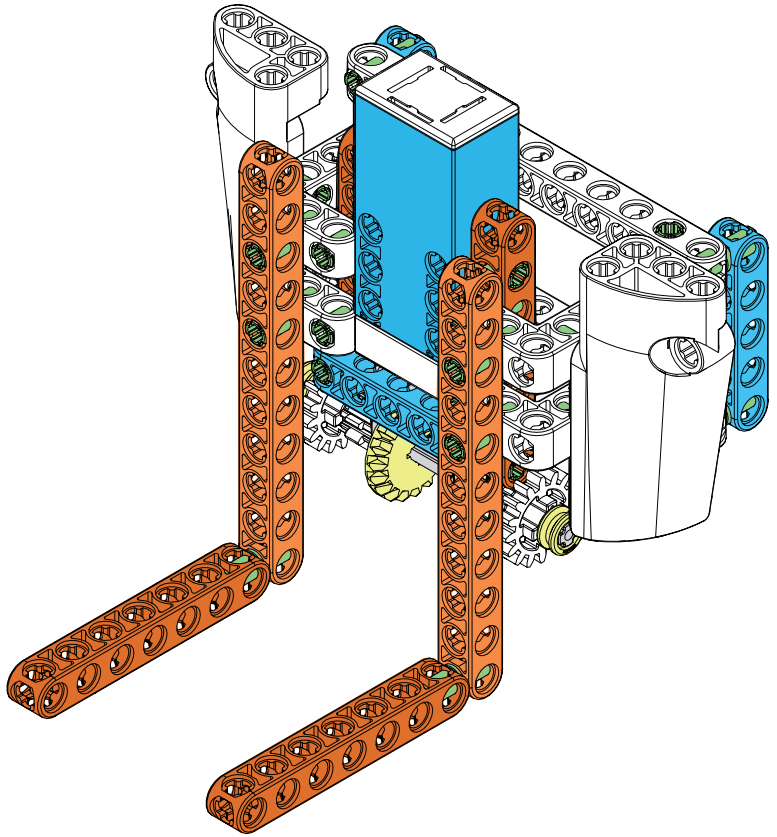

11

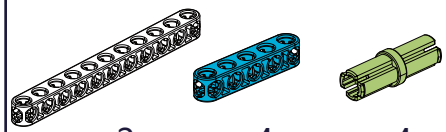

x2 x4 x4

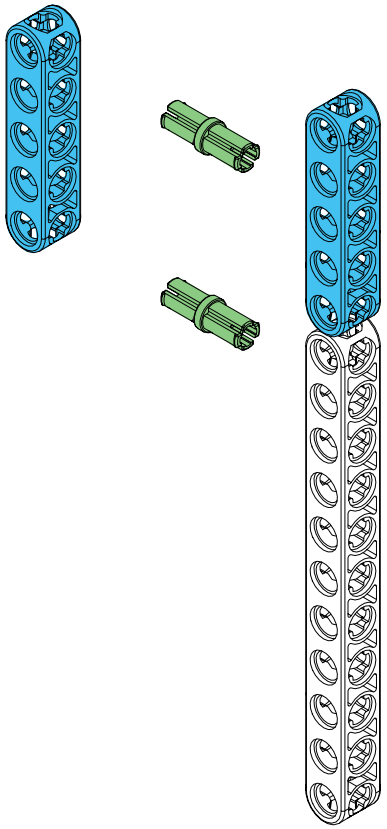

x2

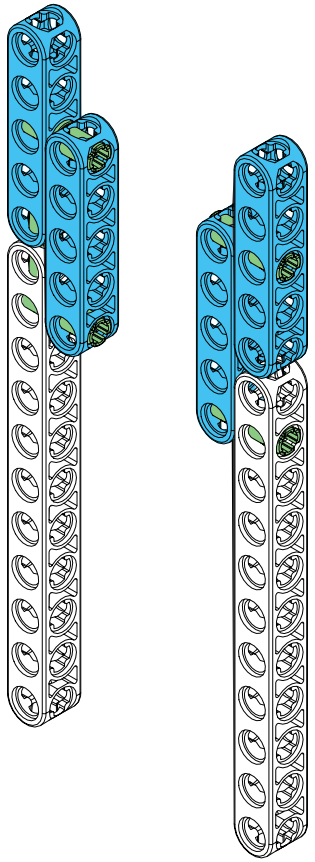

12

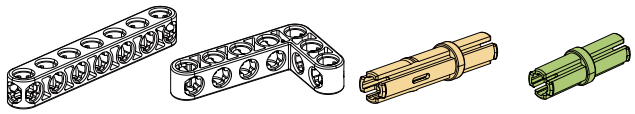

x1 x2 x4 x2

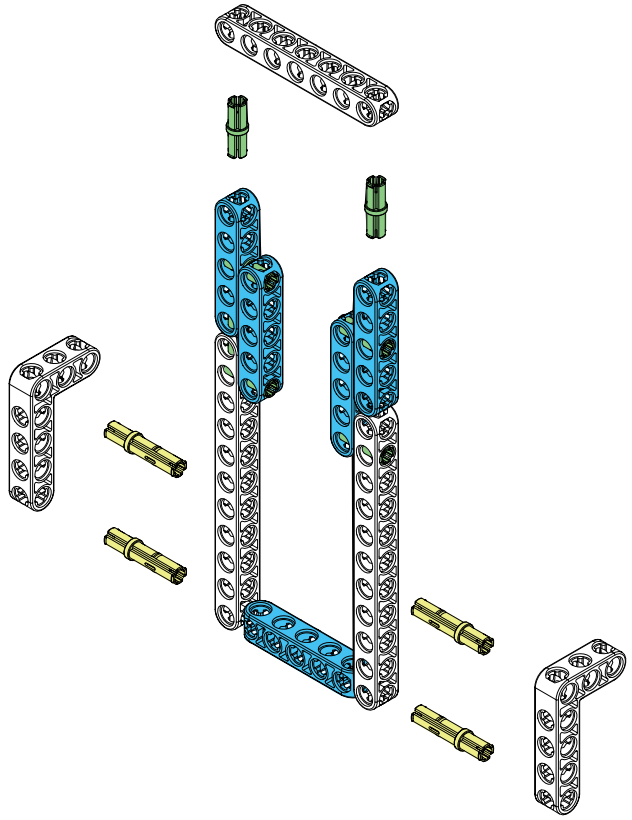

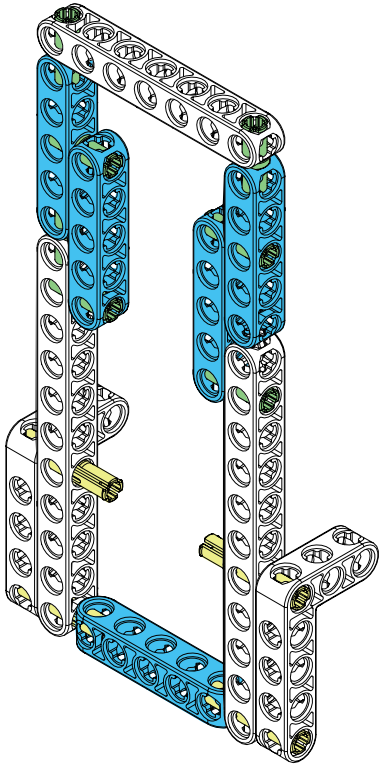

13

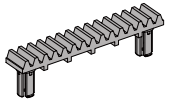

x4

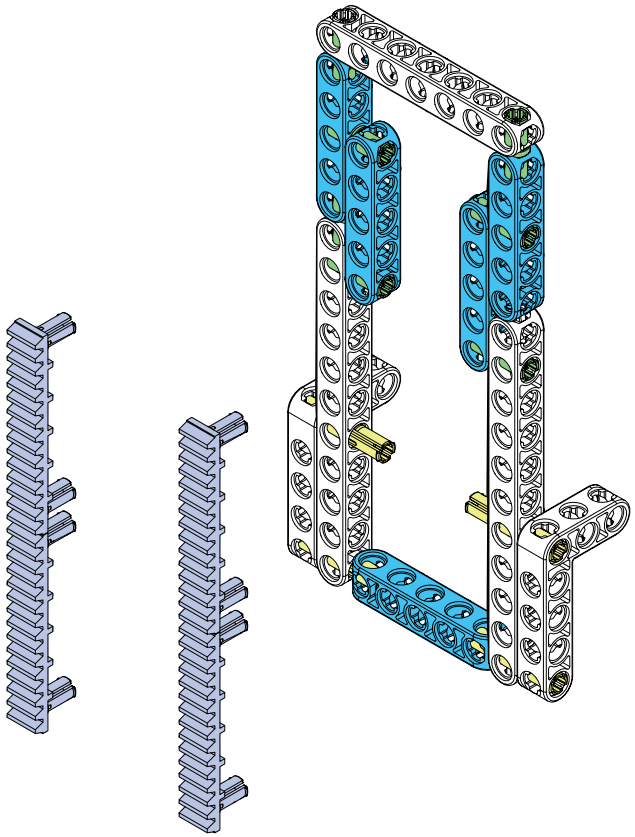

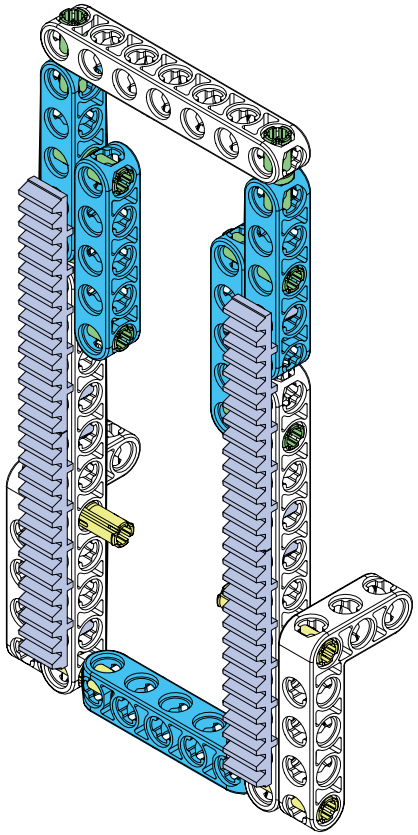

14

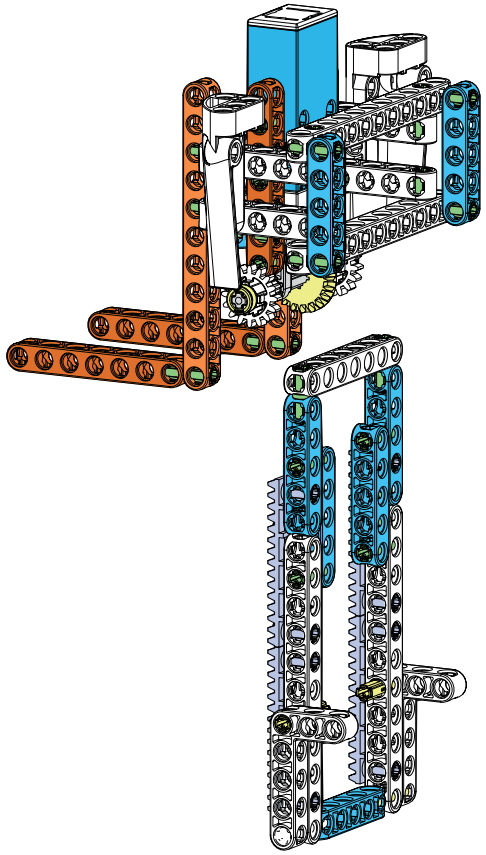

#10

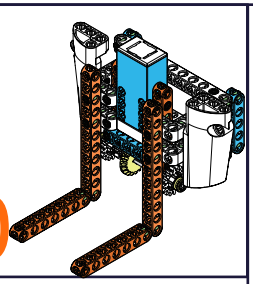

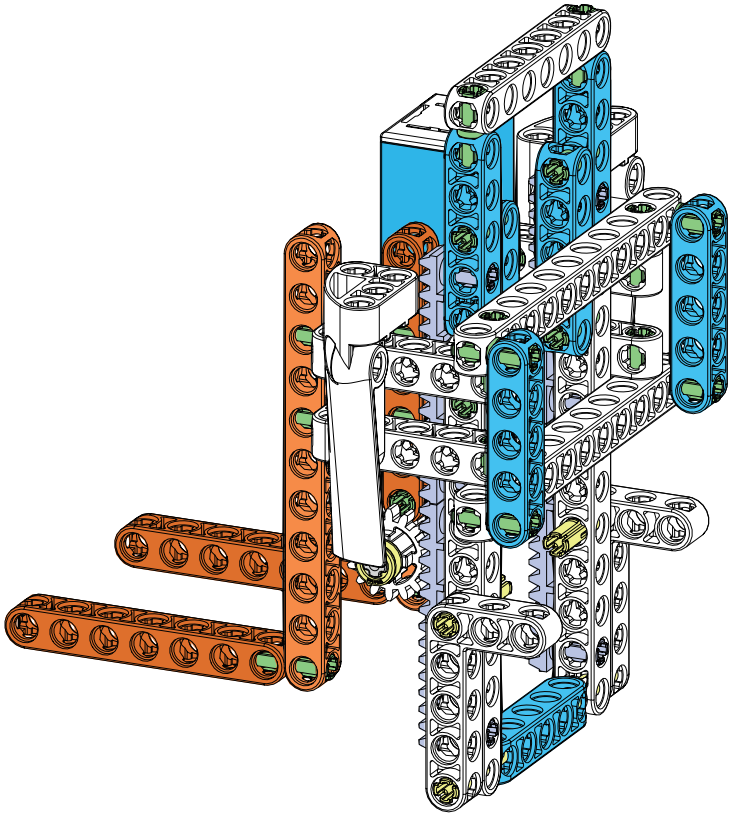

Forklift

15

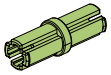

x4

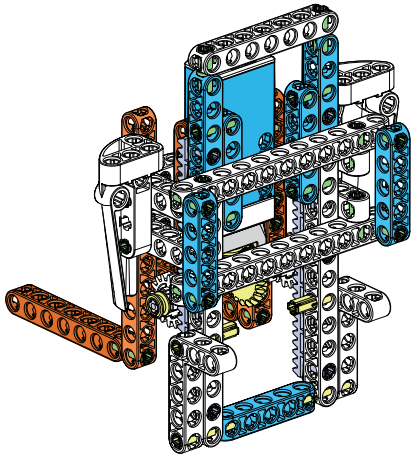

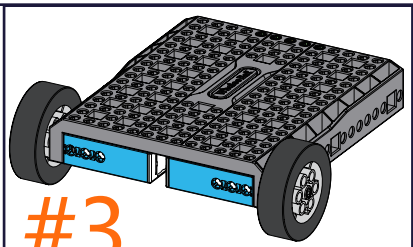

#3

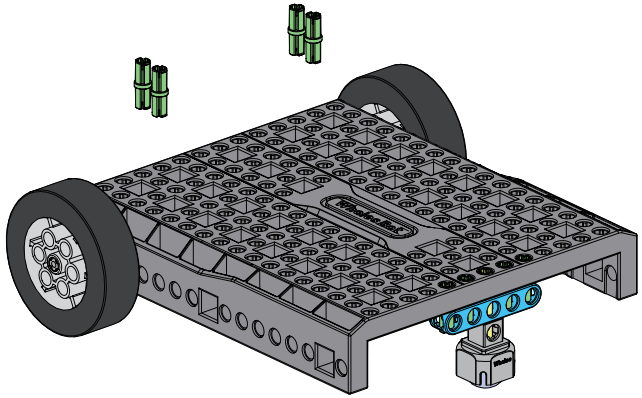

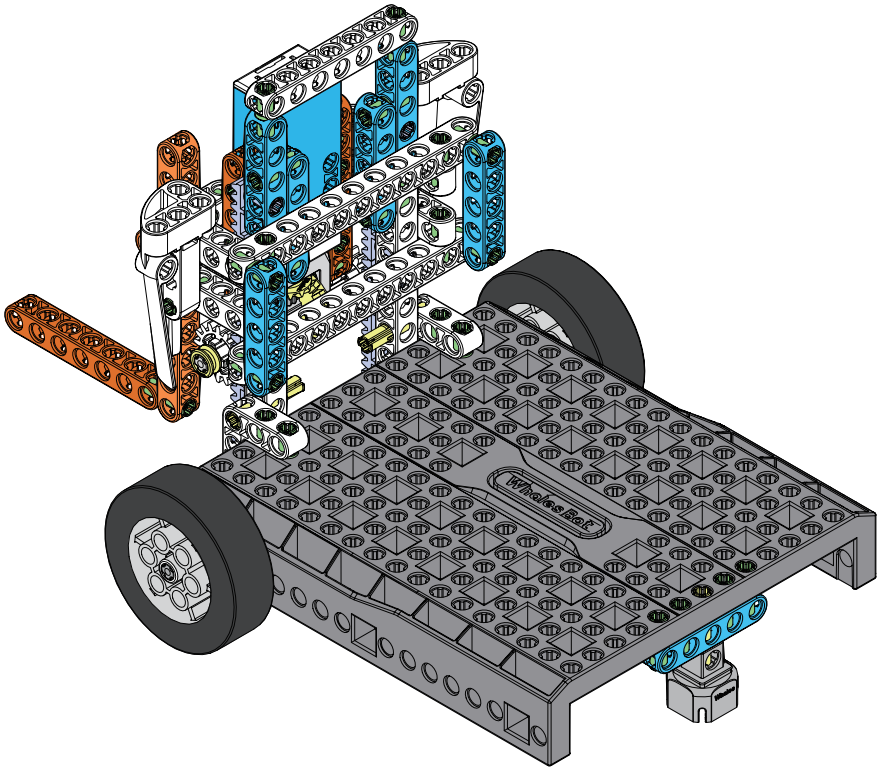

16

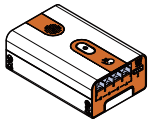
x1

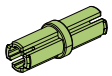
x4

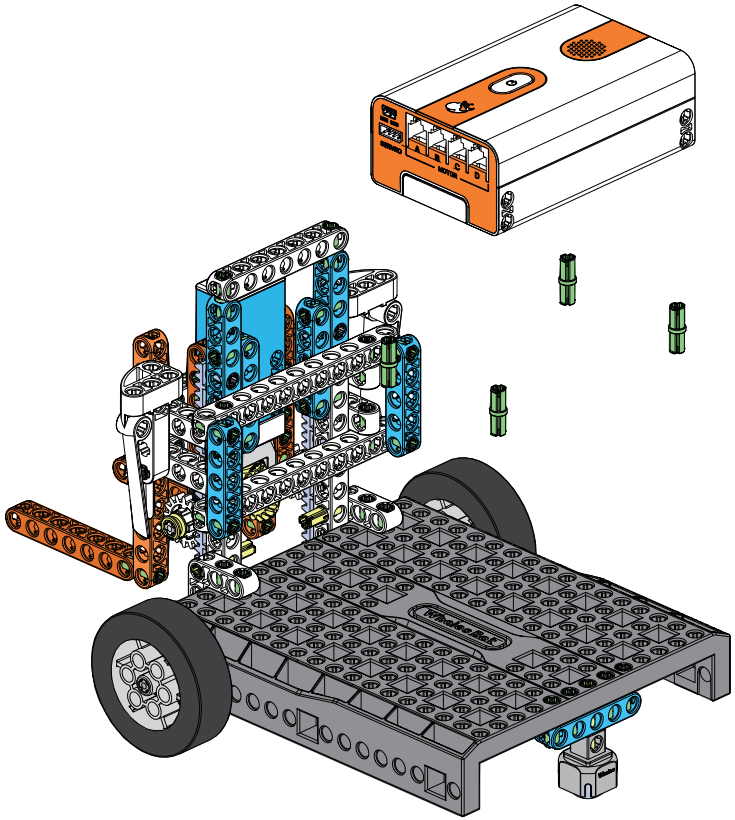

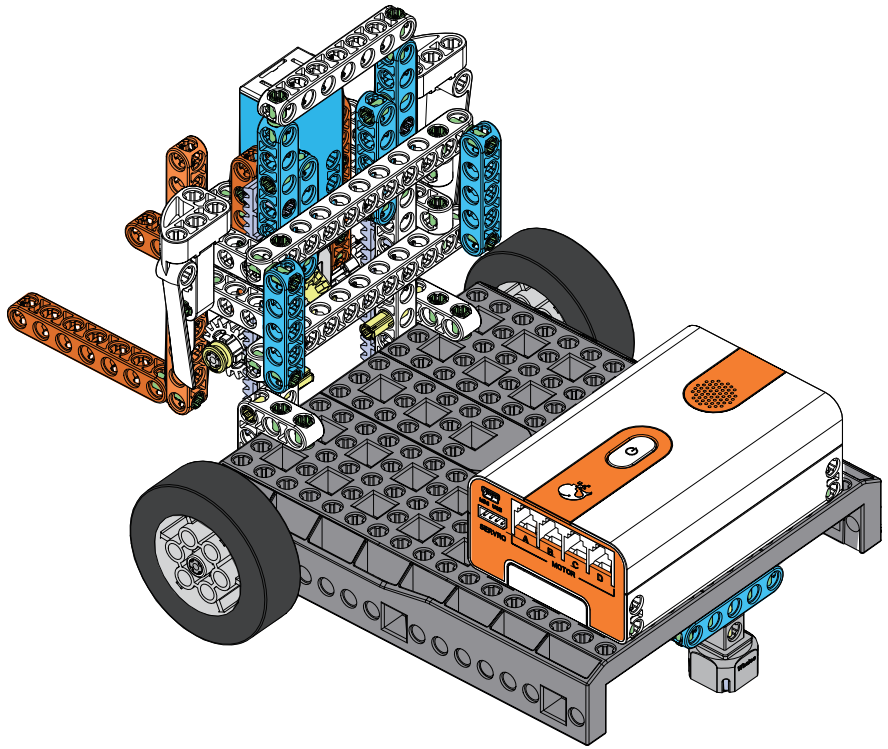

17

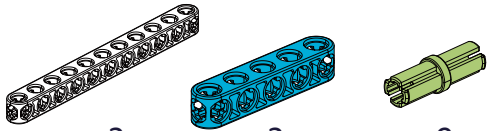

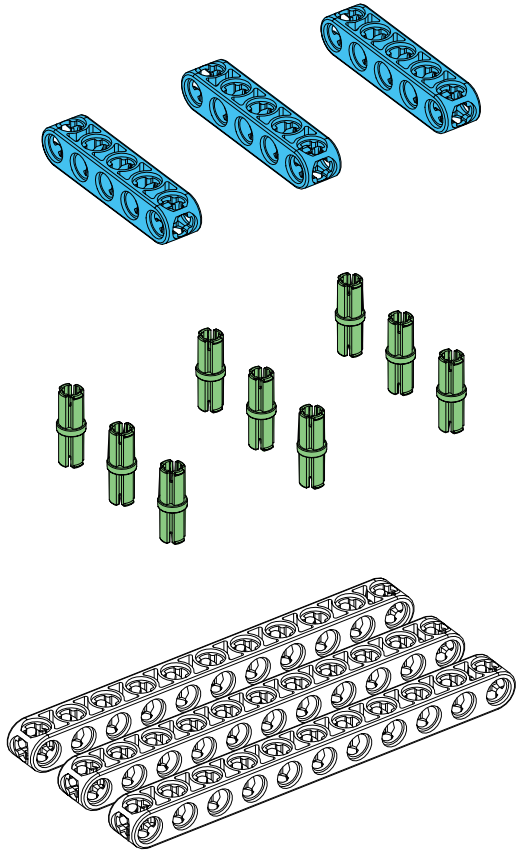

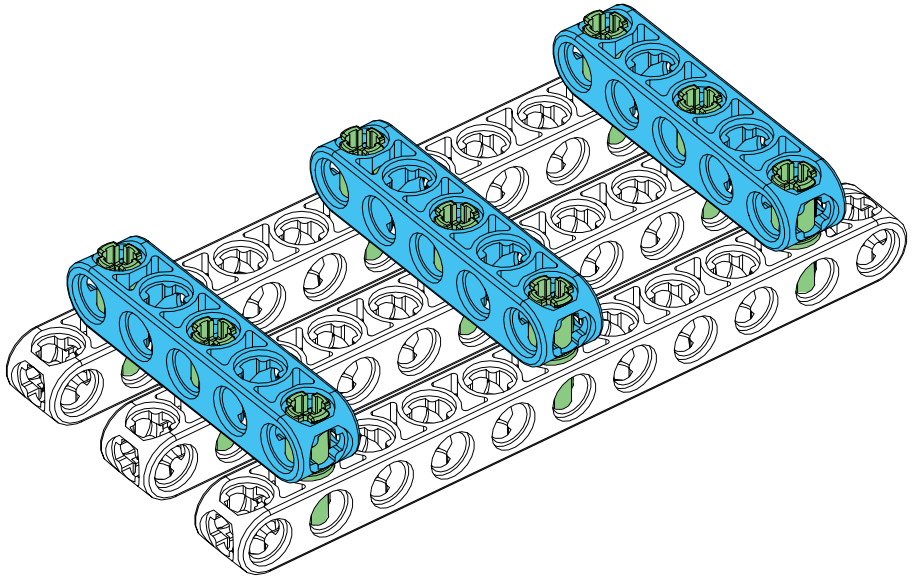

18

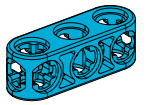
x4

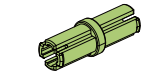
x4

