Lifting Maintenance Vehicle

Lifting Maintenance Vehicle

Basic Teaching Information					
Teaching facility	AI Module 1	Teaching mode	Project-based learning	Class duration	90 minutes

Teaching Objectives

In this lesson, by learning the course and under the guidance of the teacher, the students shall:

- Learn the use of three-motor
- Understand the symmetric structure
- Complete virtual tasks

Key Points and Difficulties

- Details during building, including symmetry and fixing
- Learn the use of three-motor

Lifting Maintenance Vehicle

Step 1 Introduction of the Topic

- 1.One day, Teacher Chunchun and friend had an appointment to have dinner at 5 pm. However, because of work, Teacher Chunchun was going to be late, so she hurriedly rode her bicycle out. But all of a sudden, the streetlight went out. It turned pitch dark that Teacher Chunchun, who was riding a bicycle, couldn’ t see the road anymore. It was very dangerous. What can we do about that?

Ask the students to speak their minds.

Ask the students that have they ever seen the streetlight? What should they do if the streetlights are broken?

Ask the students to speak their minds.

Step 2 Topic Analysis

- Design the shape of the lifting maintenance vehicle

Guide the students to design their own lifting maintenance vehicle on the blackboard

- How does the lifting maintenance vehicle work?
- What does the lifting platform look like? What pieces can be used for building?
- What does the lifting platform need to go up and down?

Step 3 Start the Hands-on

Guide the students to build a lifting maintenance vehicle and explain the gearing structure therein.

Briefly introduce graphical programming software to the students to guide them through programming

Learn to skillfully set the motor module

Refer to the guidelines to familiarize students with the steps to connect the controller to the computer via a USB cable.

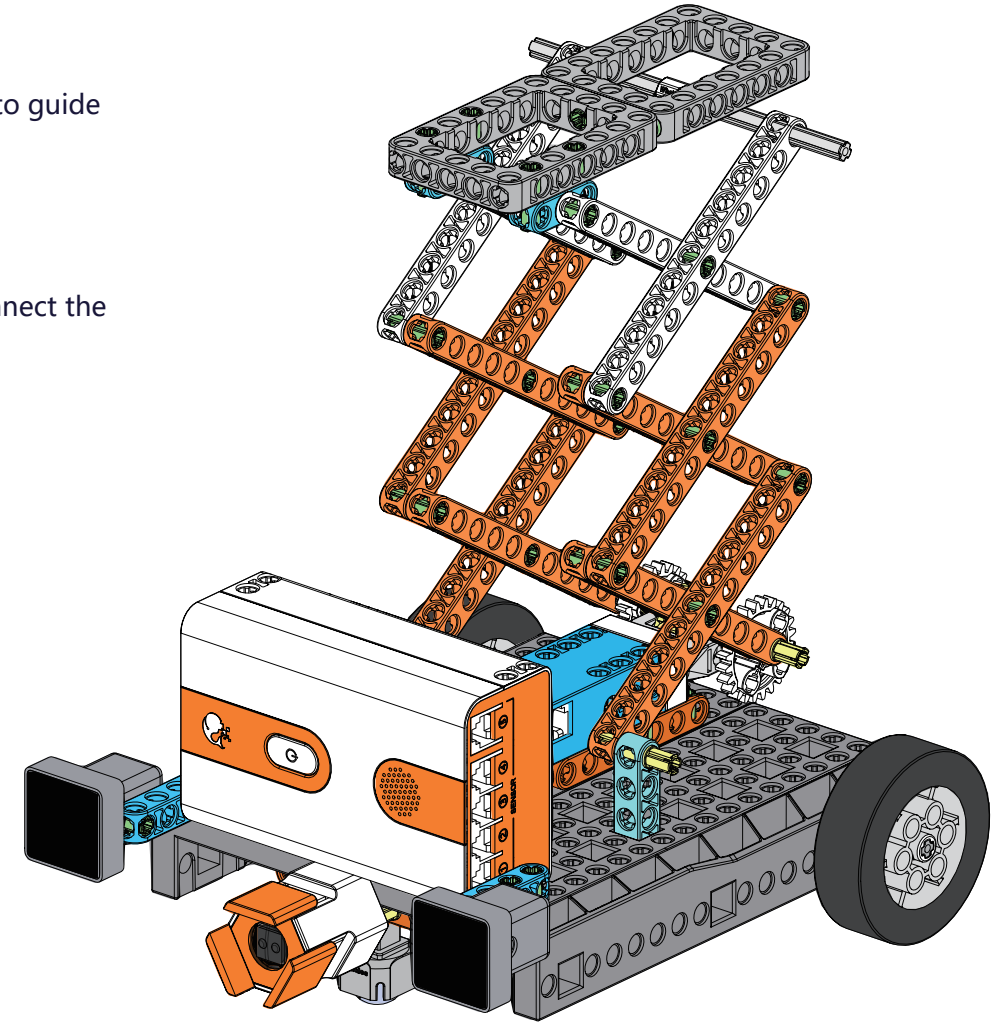

Step 4 Contents Assessment

Post-class summary, which can be reflected by multiple choices or true or false questions as far as possible, other than gap filling or questions

For example, is the wiper’ s gearing we did today using a lever or a linkage?

Is the program module we learned today setting up the motor, etc., to emphasize the knowledge.

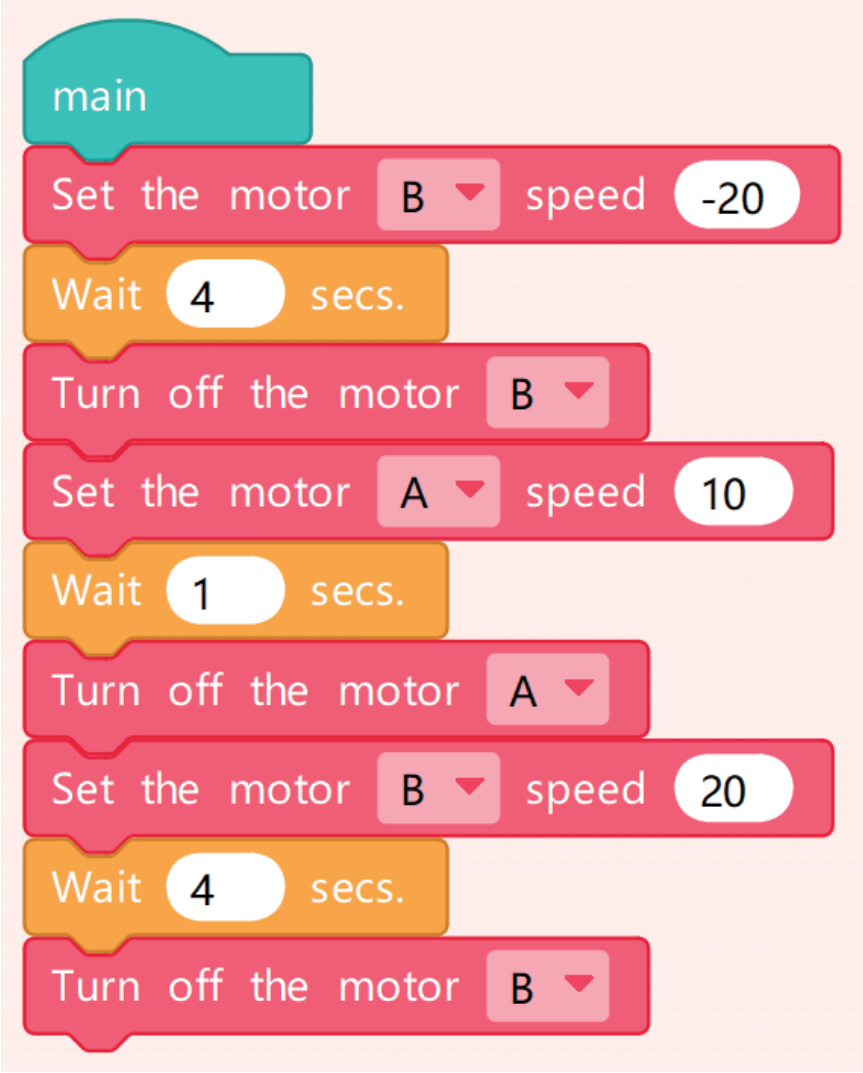

Step 5 Display of Outcomes

Ask the students to present their outcomes to their parents.

Introduce what we did today? Lifting maintenance vehicle!

Does it have a lifting platform?

Do we make the lifting platform move through a linkage?

Lifting Maintenance Vehicle

1

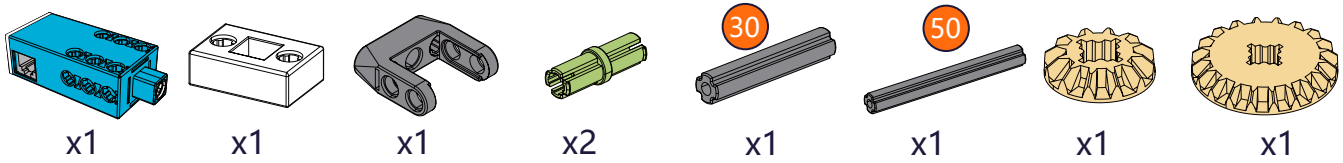

x1 x1 x1 x2 x1 x1 x1 x1

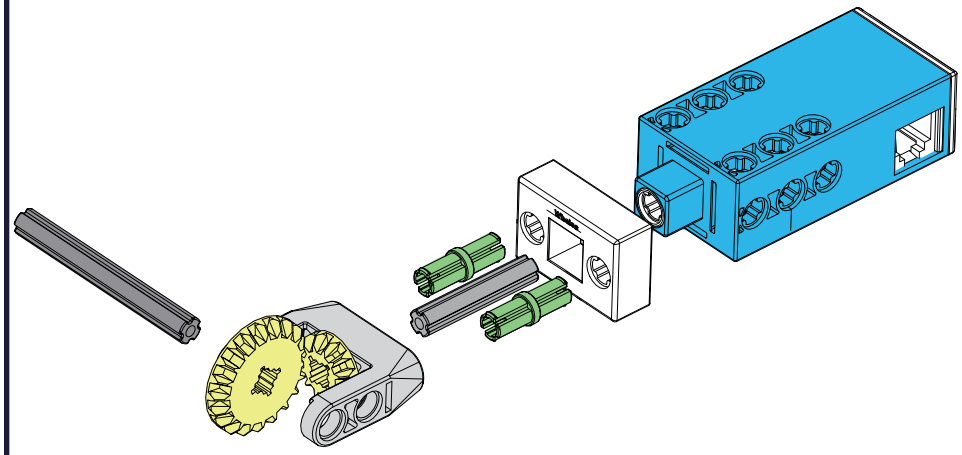

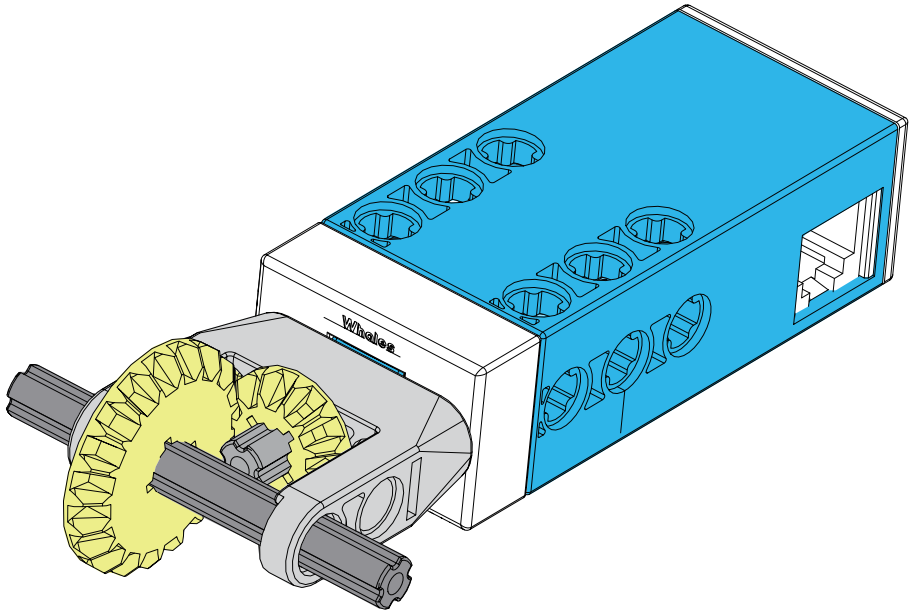

2

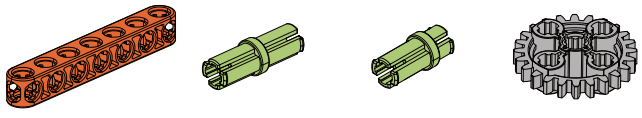

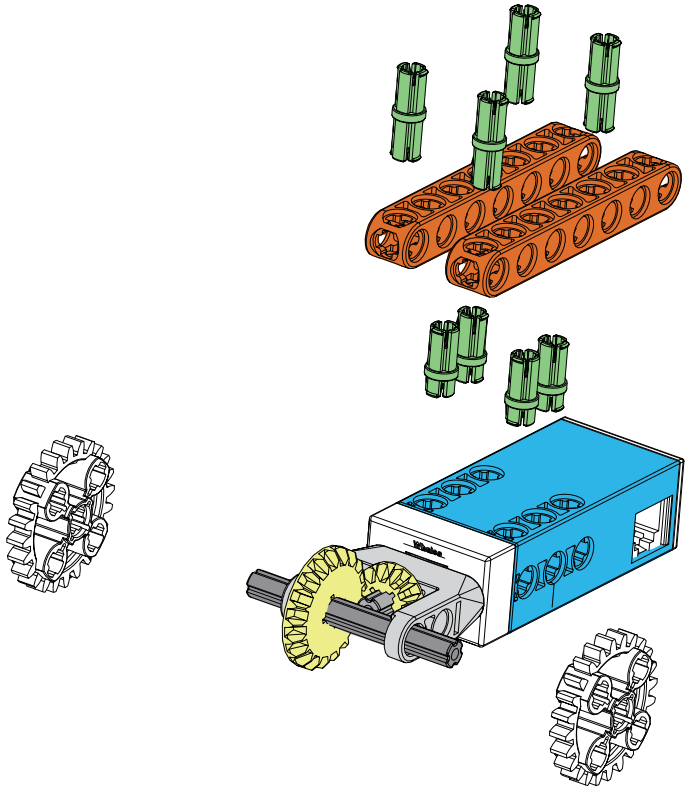

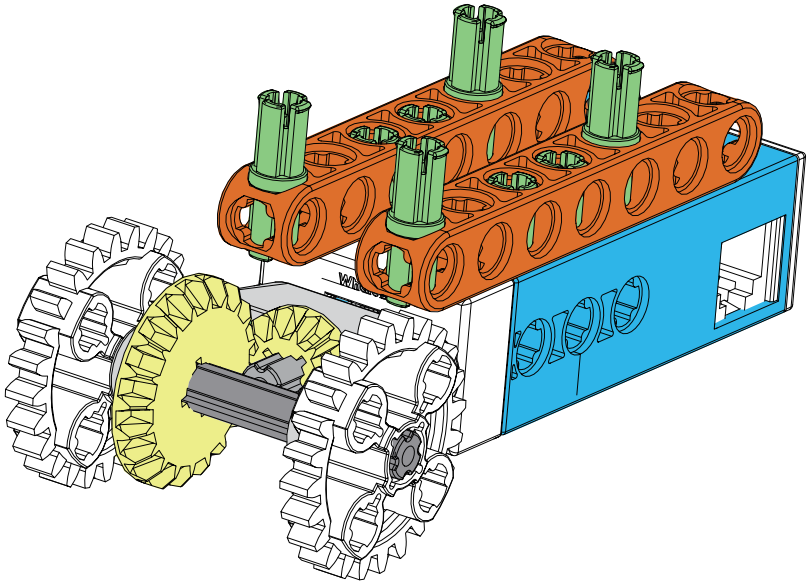

Lifting Maintenance Vehicle

3

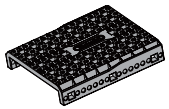
x1

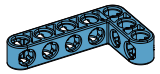
x2

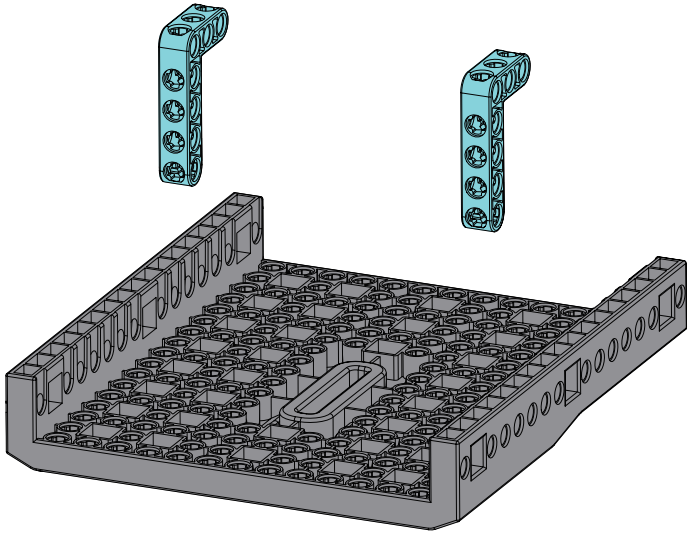

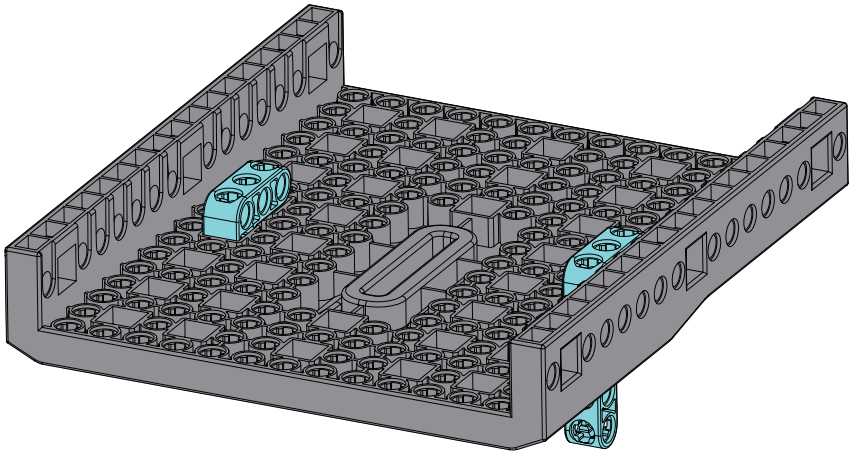

Lifting Maintenance Vehicle

4

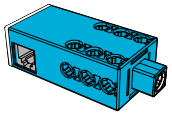

x2

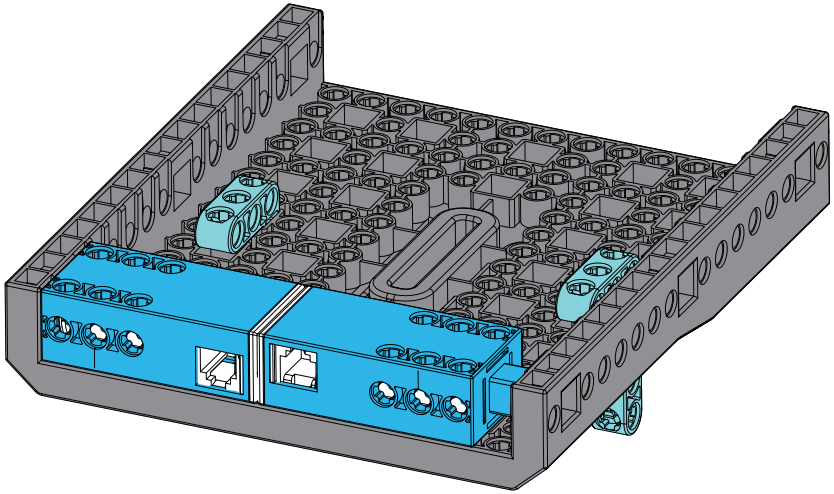

x2

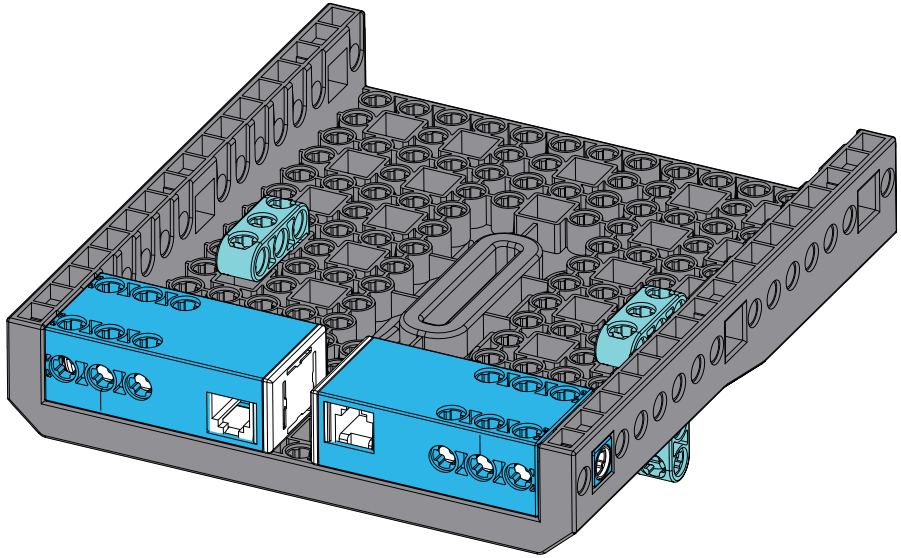

Lifting Maintenance Vehicle

5

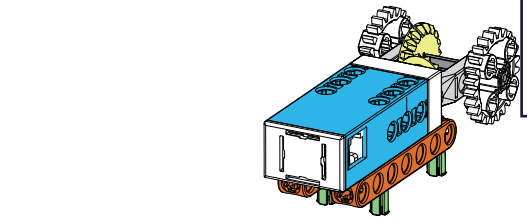

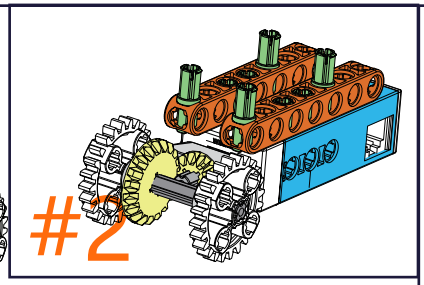

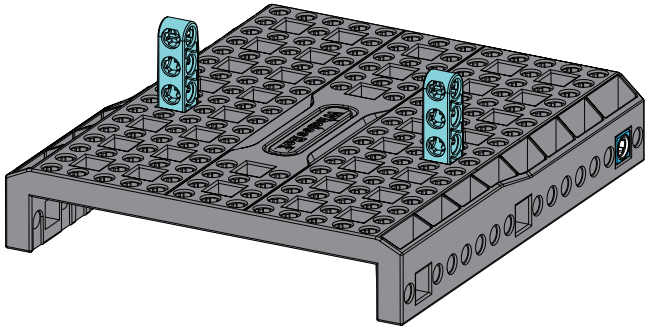

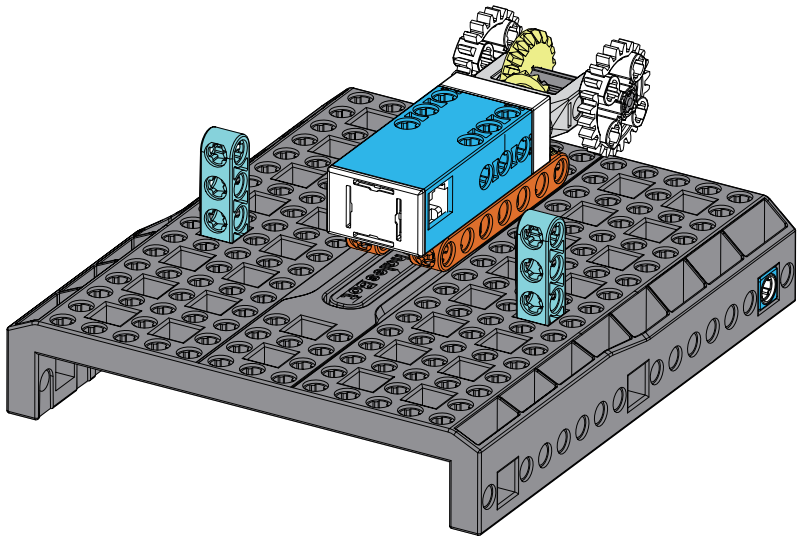

Lifting Maintenance Vehicle

6



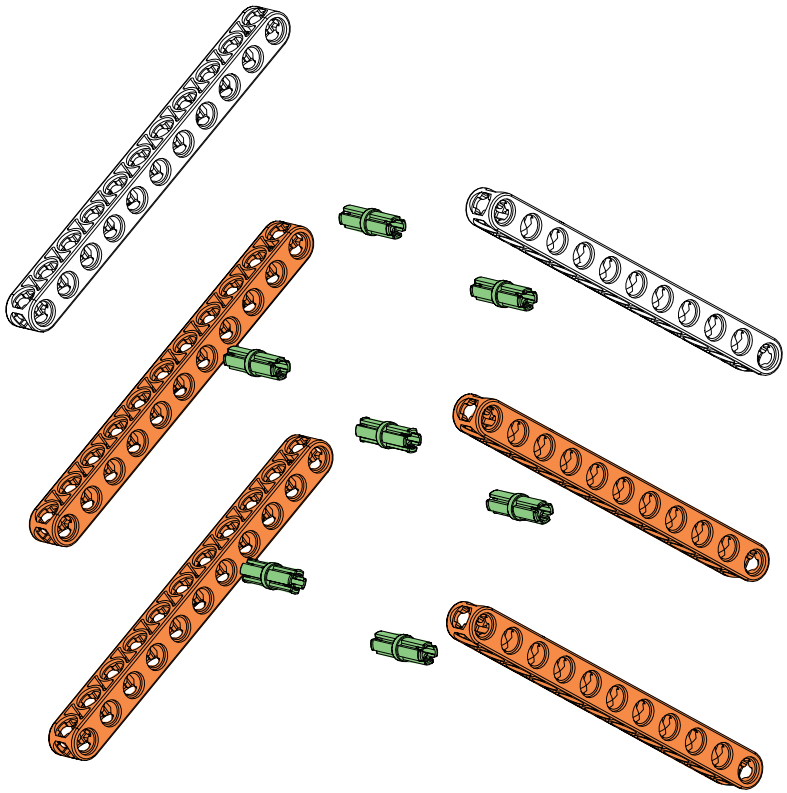

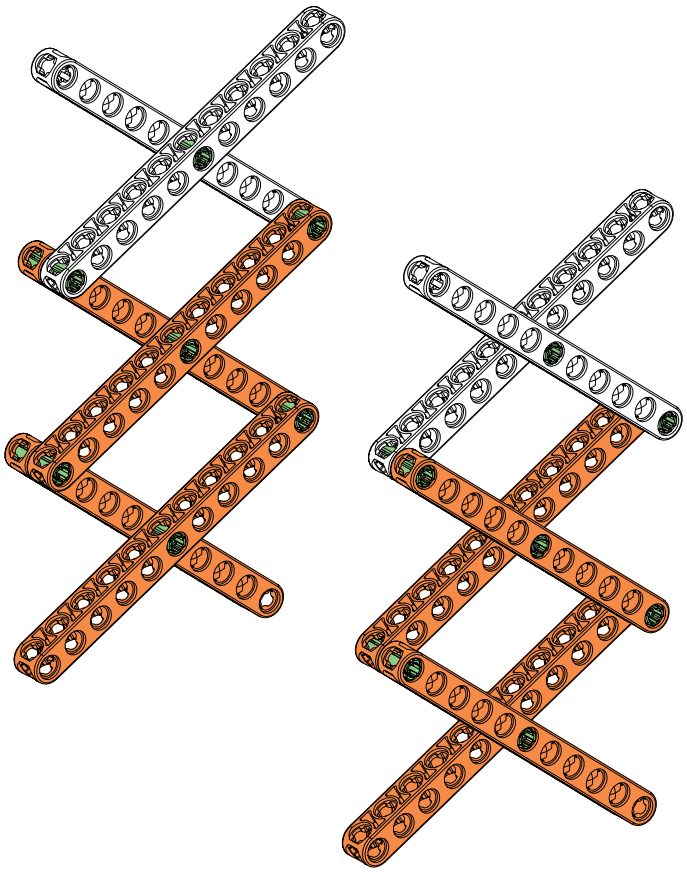

Lifting Maintenance Vehicle

7

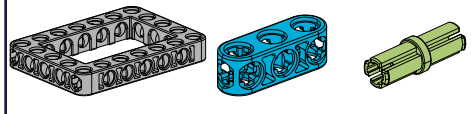

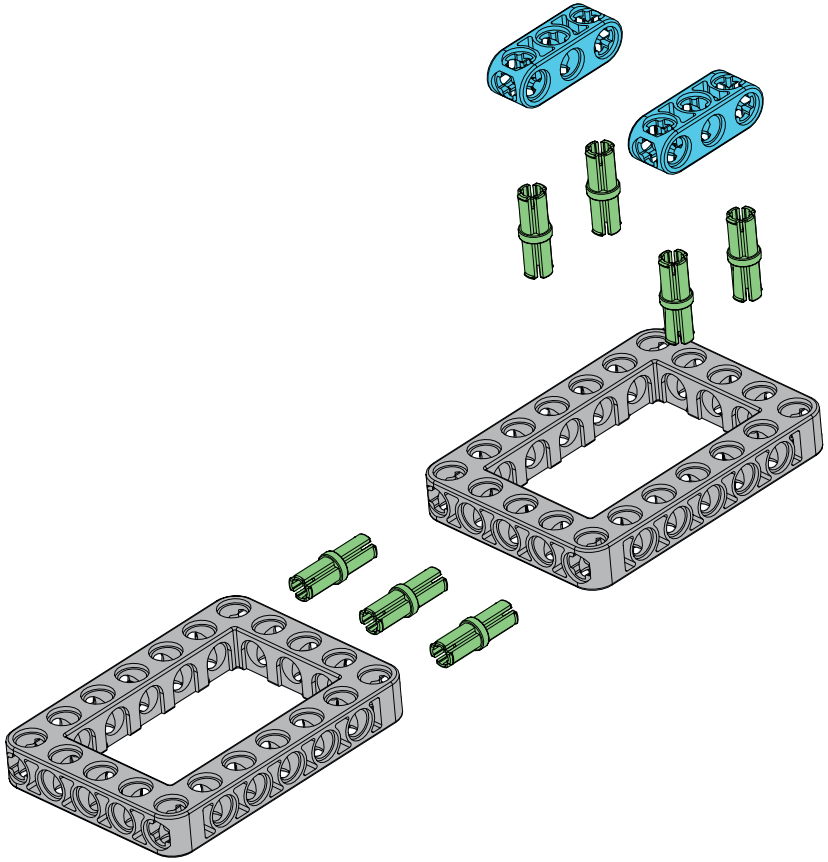

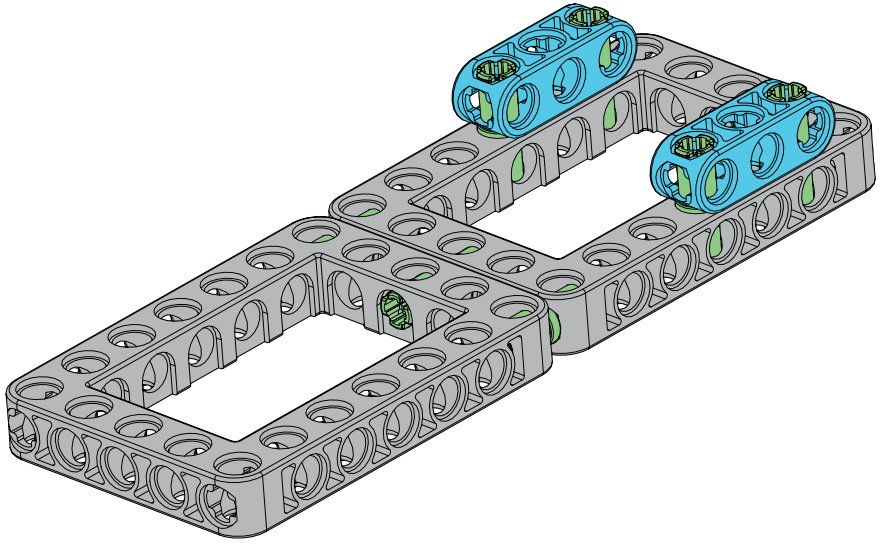

Lifting Maintenance Vehicle

8

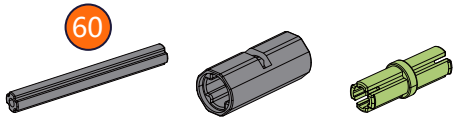

x2 x1 x2

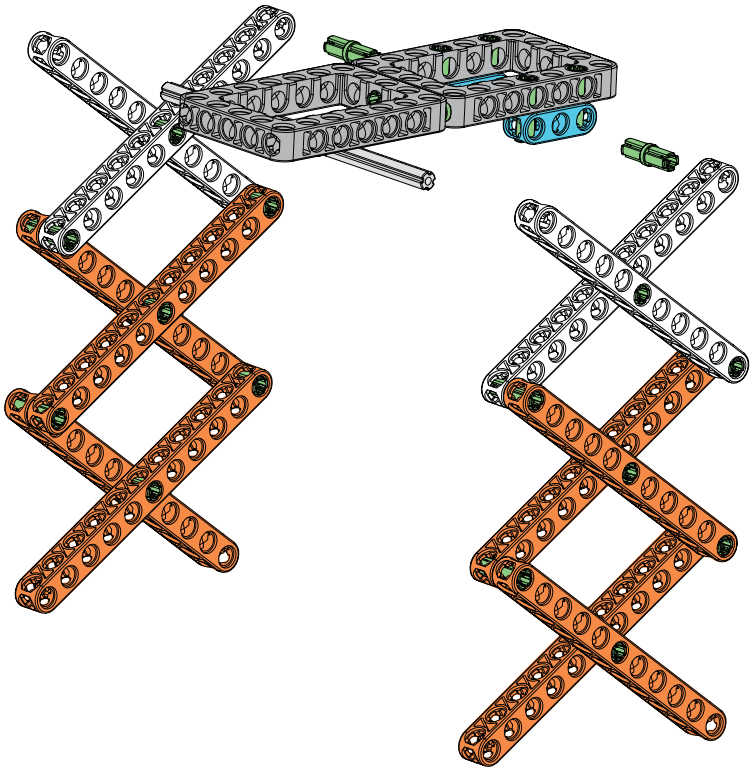

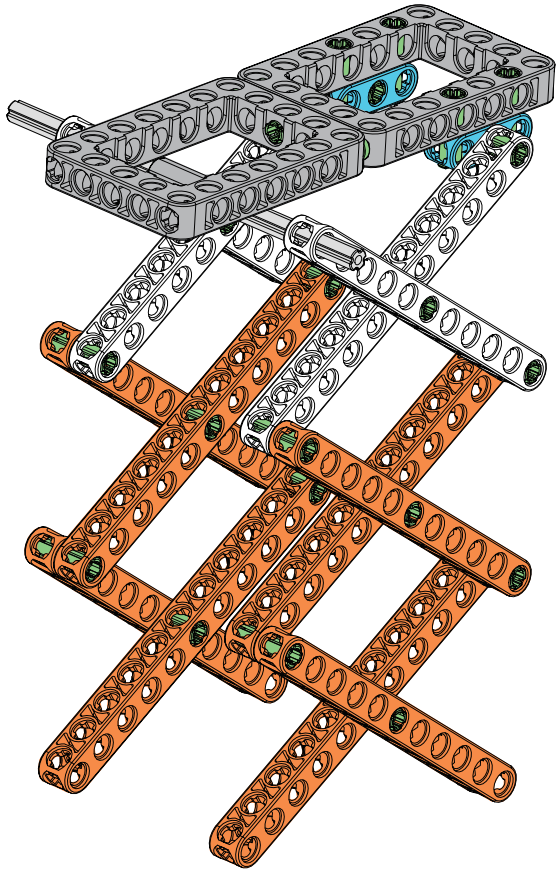

Lifting Maintenance Vehicle

9

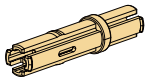

x4

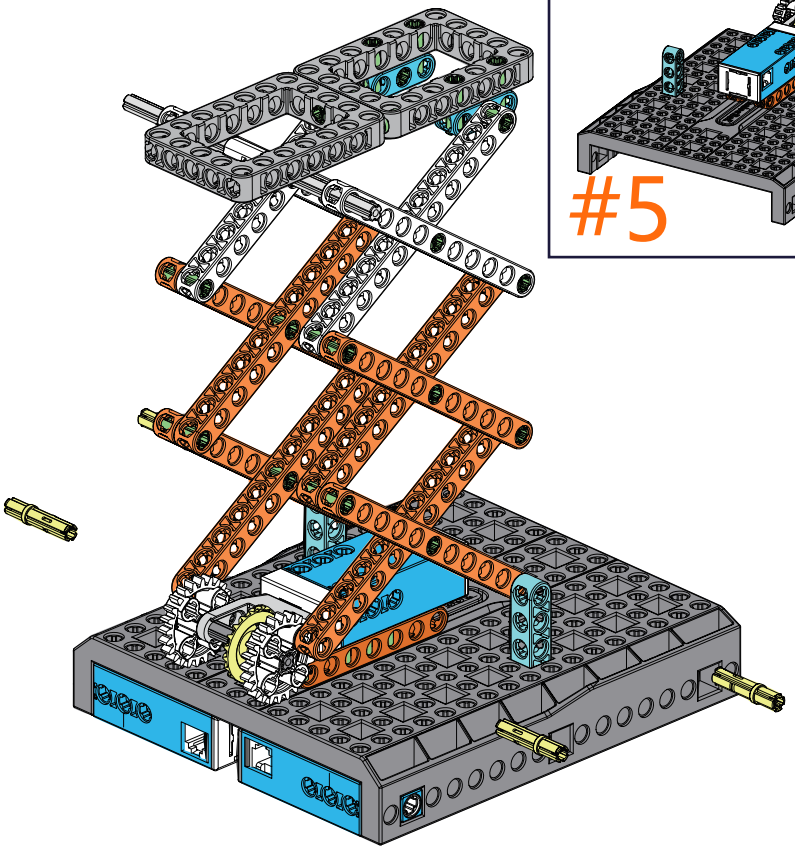

#5

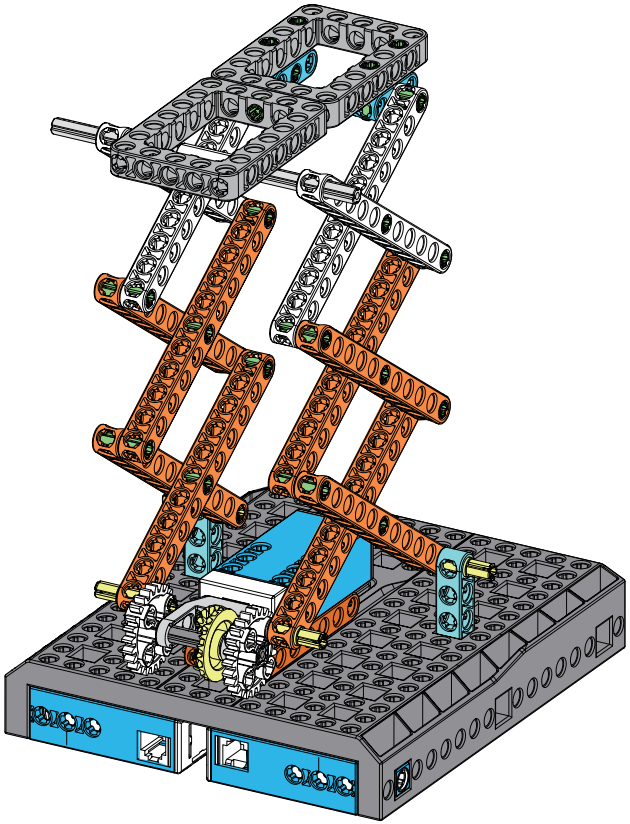

Lifting Maintenance Vehicle

10

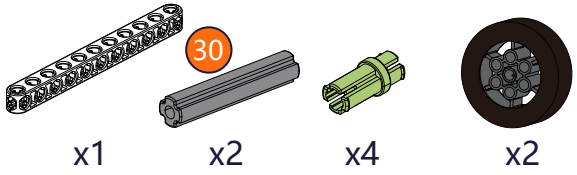

x1 x2 x4 x2

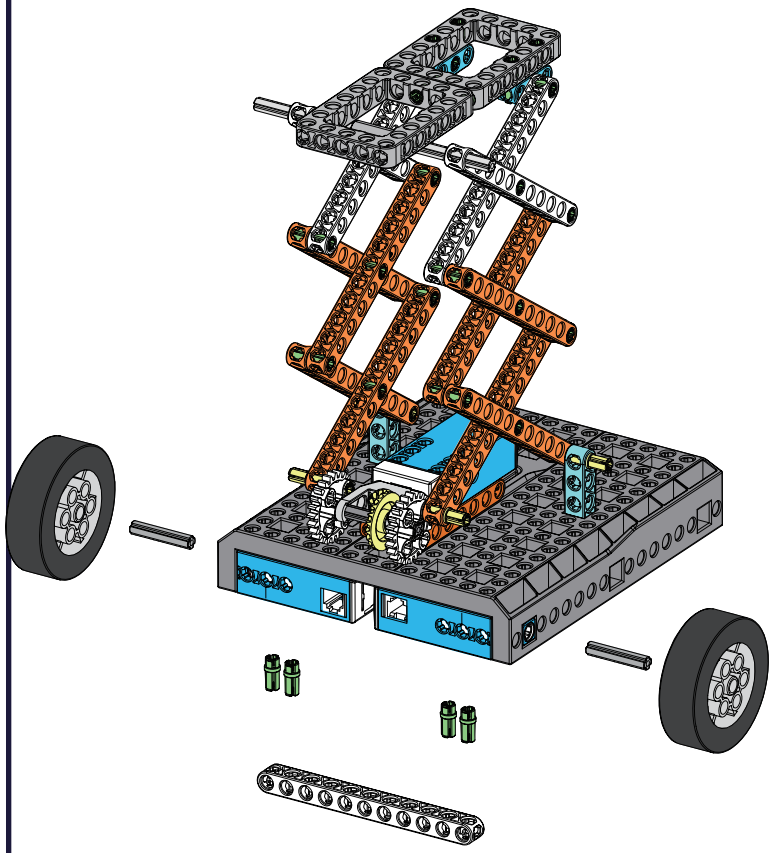

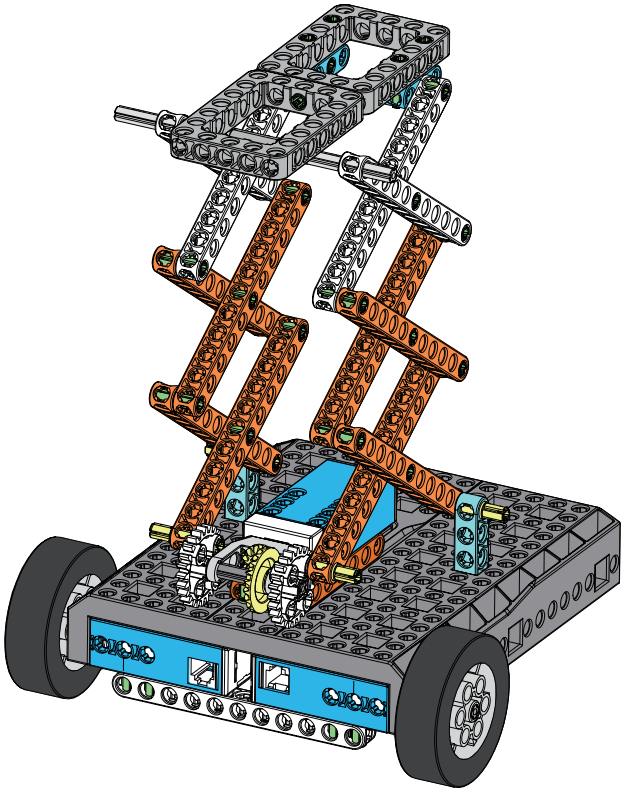

Lifting Maintenance Vehicle

11

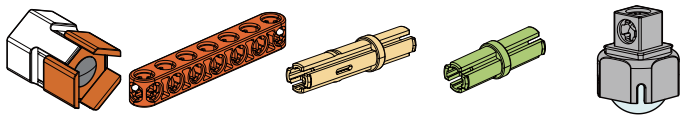

x1 x1 x3 x2 x1

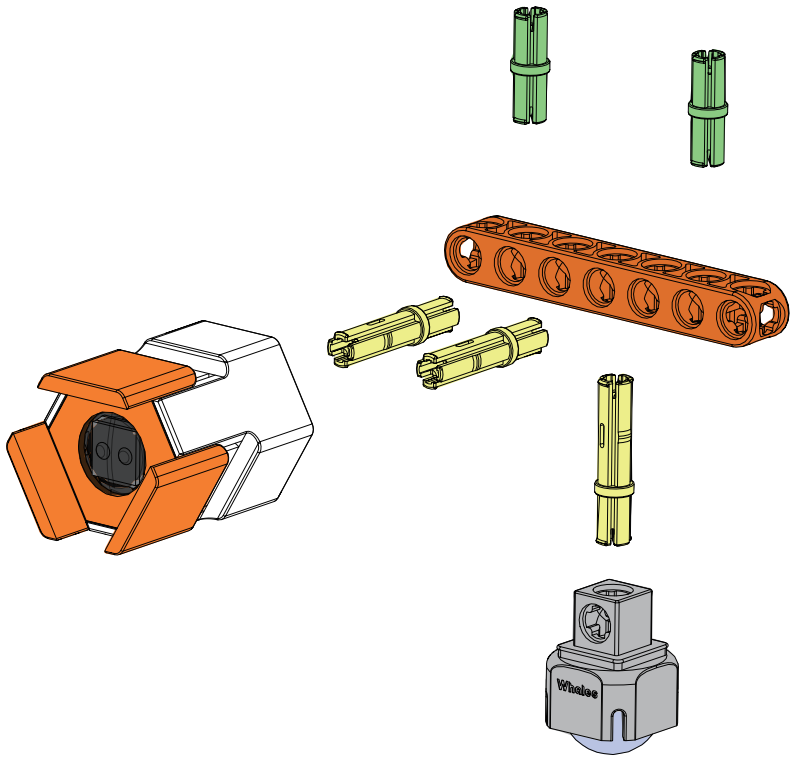

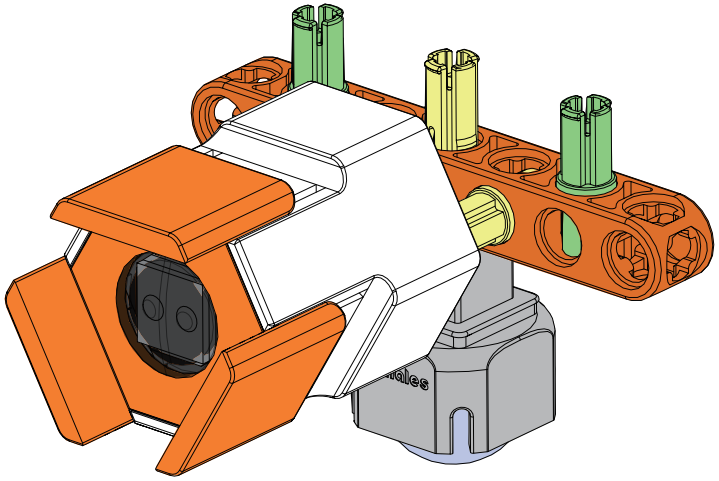

12

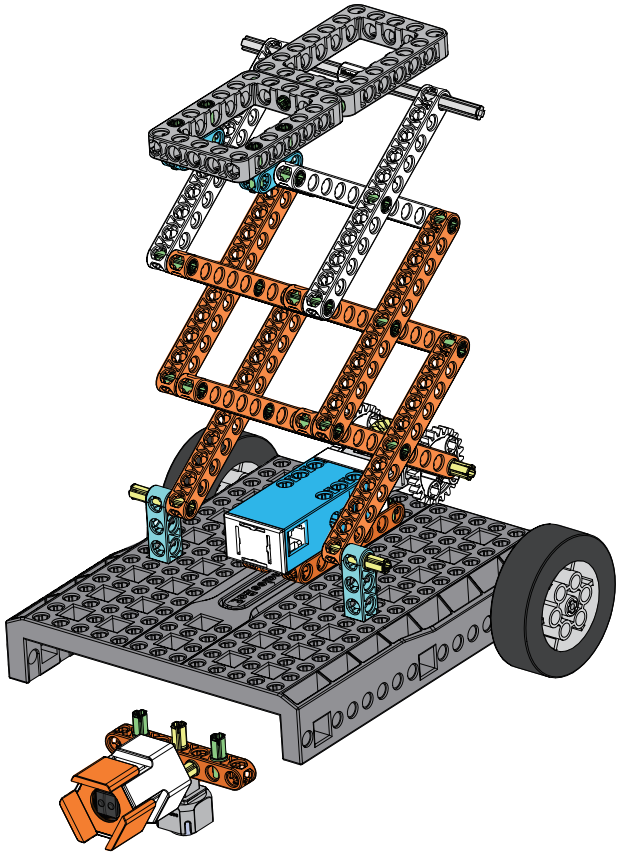

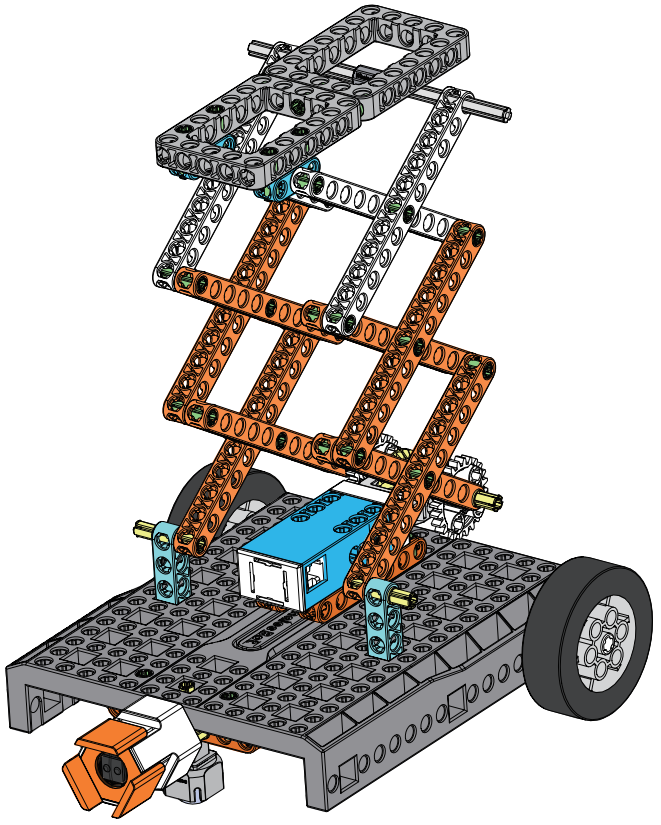

Lifting Maintenance Vehicle

13

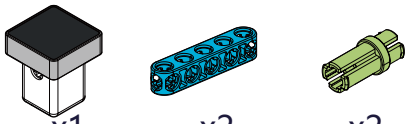
x1

x2

x2

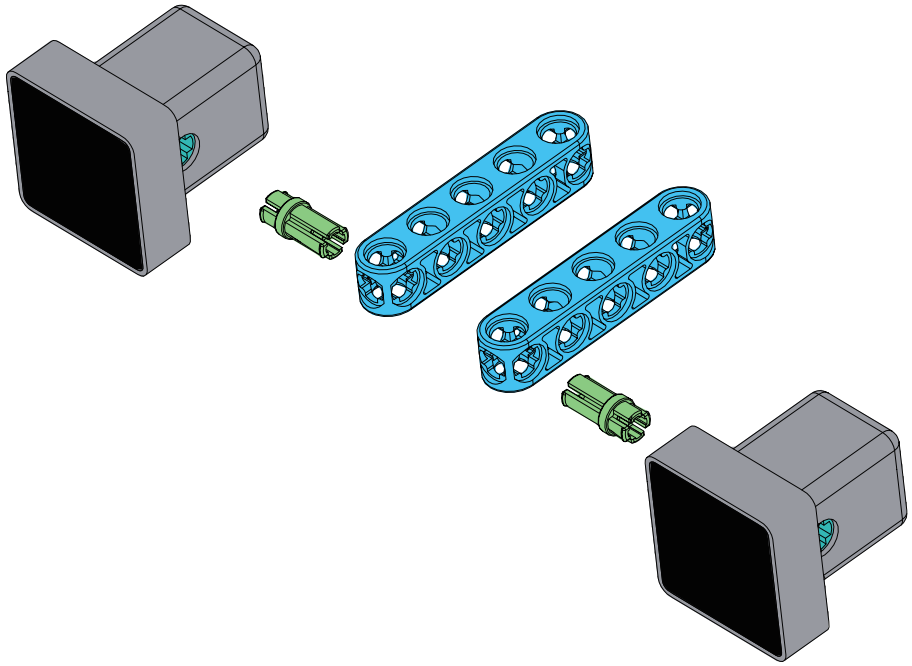

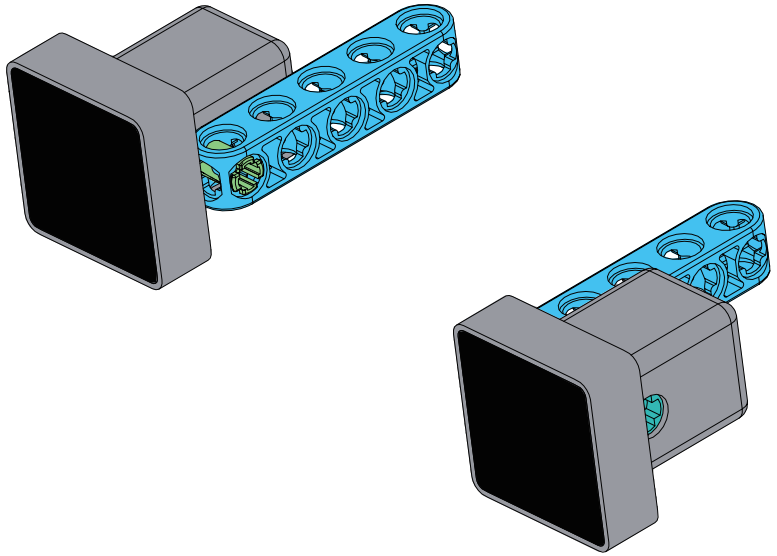

Lifting Maintenance Vehicle

14

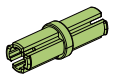

x4

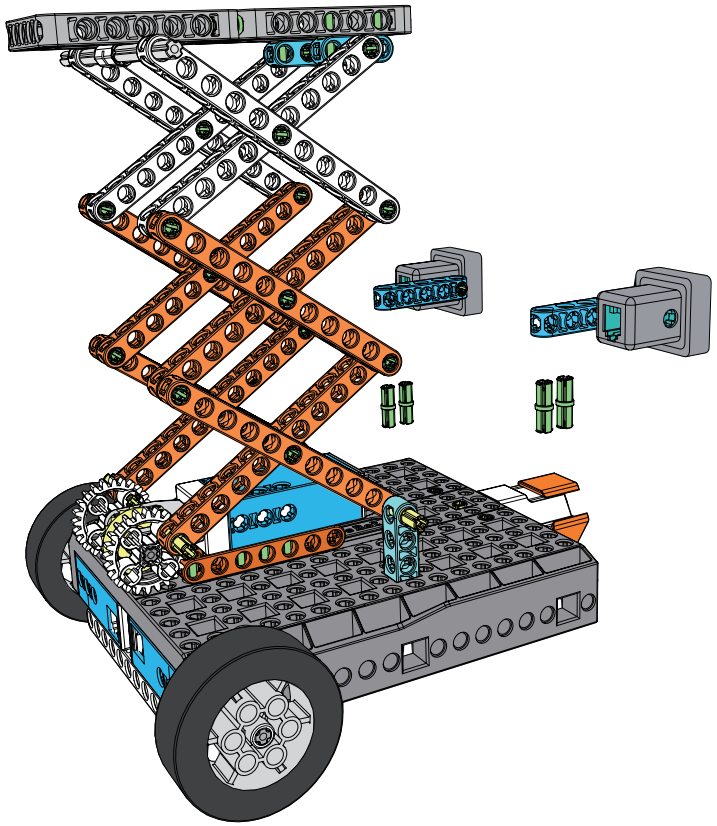

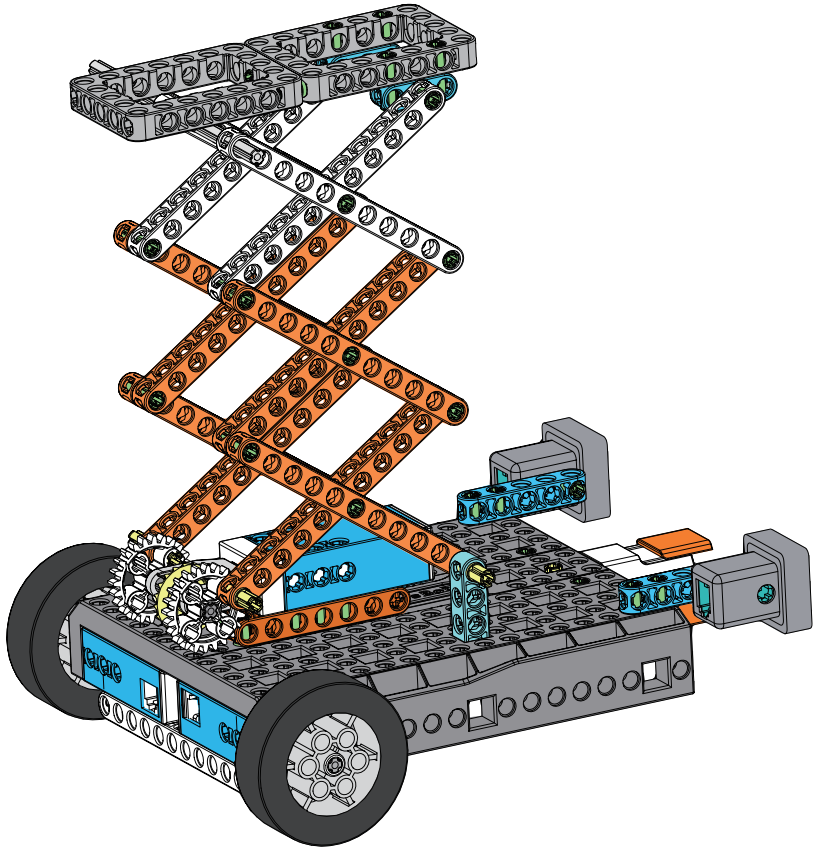

Lifting Maintenance Vehicle

15

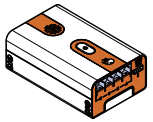
x1

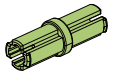
x2

