Fare Gate

Fare Gate

Basic Teaching Information					
Teaching facility	AI Module 1	Teaching mode	Project-based learning	Class duration	90 minutes

Teaching Objectives

In this lesson, by learning the course and under the guidance of the teacher, the students shall:

- Learn the grayscale integrated sensor and LED lattice screen
- Build and program the fare gate.
- Apply and learn the closed loop motor

Key Points and Difficulties

- Introduction of grayscale integrated sensor
- Application of closed loop motor
- Focusing on mastering the use of programming directive blocks.
- Understanding the structure of programming correctly.

Fare Gate

Step 1 Introduction of the Topic

- Have you ever taken the subway? To take the subway, we need to buy something first, yes, a subway fare. Do you know how to use the fare? We need to swipe it at the gate before we are allowed in. Today we' re going to talk about this fare gate.

Ask the students to speak their minds.

- Ask the students if they have seen the fare gate?

Ask the students to speak their minds.



Step 2 Topic Analysis

- Design the fare gate' s shape

Guide the students to design their own fare gate on the blackboard.

- The shape and function of the fare gate
- What pieces can be used to build a fare gate?
- What is the programming of the fare gate?

Fare Gate

Step 3 Start the Hands-on

Guide the students to build a fare gate and explain the programming therein.

Briefly introduce to the students the graphical programming software to guide them through programming

Learn to skillfully set the motor module

Adjust the accuracy of the fare gate by debugging the value of the grayscale integrated sensor.

Refer to the guidelines to familiarize students with the steps to connect the controller to the computer via a USB cable.

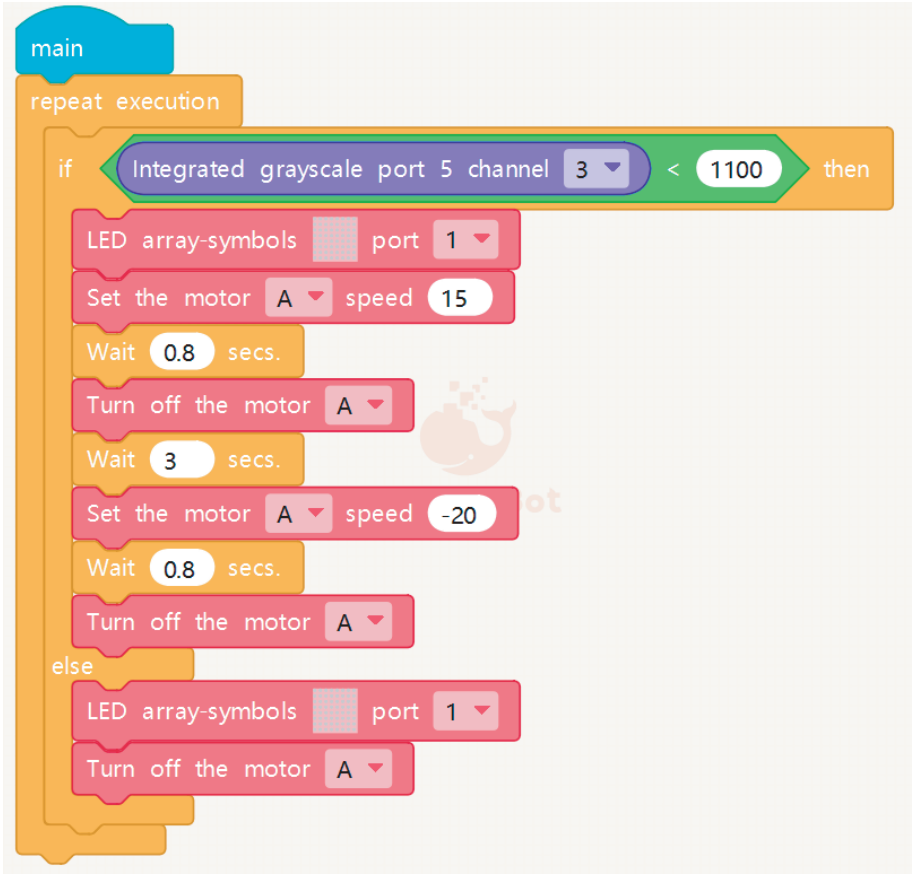

Step 4 Contents Assessment

Post-class summary, which can be reflected by multiple choices or true or false questions as far as possible, other than gap filling or questions

Such as "are the fare gates we did today using grayscale integrated sensors" ?

What are the program modules we learned today, etc., to emphasize the knowledge.

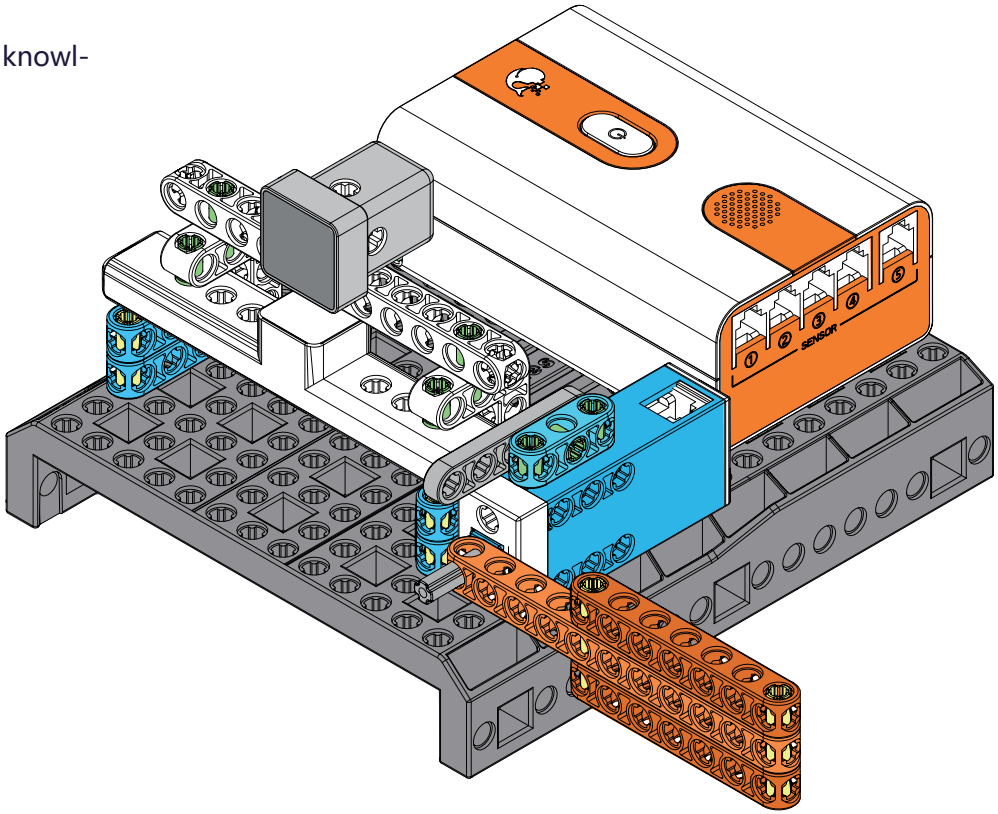

Step 5 Display of Outcomes

Ask the students to present their outcomes to their parents.

Introduce what we did today? Fare gate!

What new pieces have we used?

What kind of program do we use to make the fare gate work?

Fare Gate

1

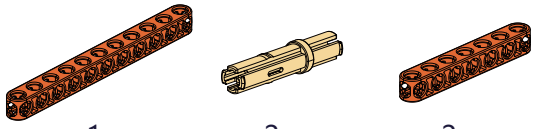

x1 x2 x2

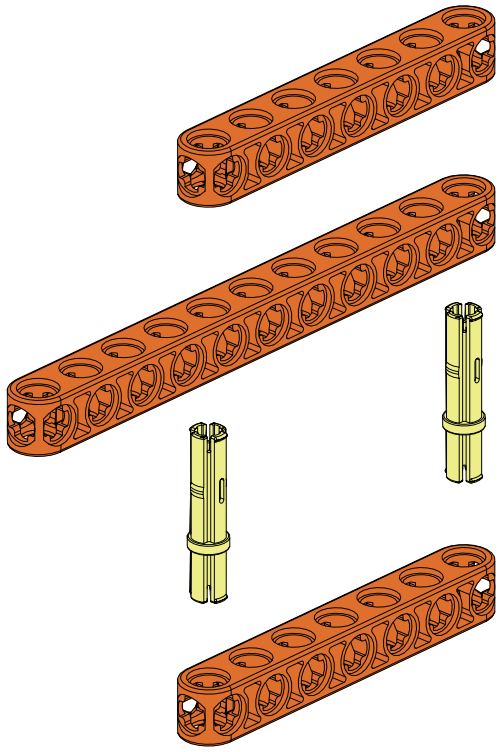

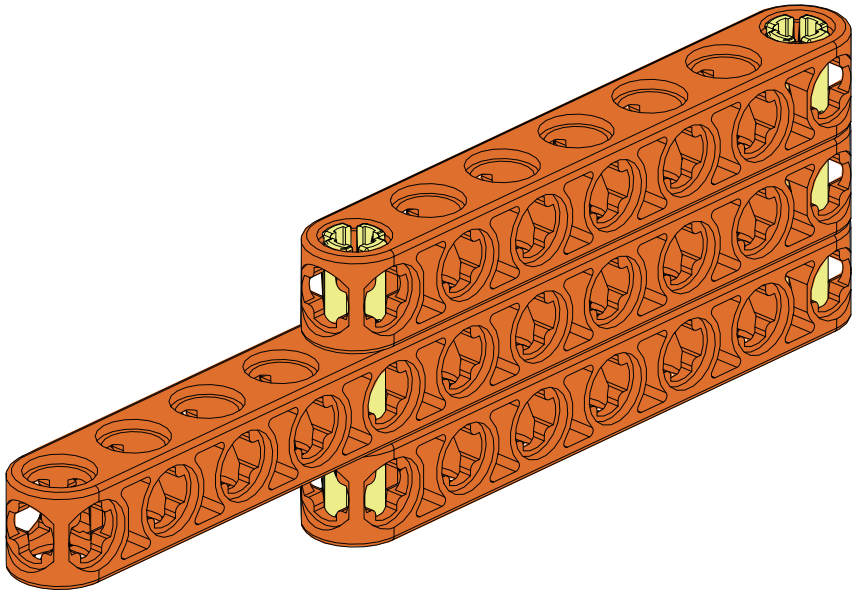

Fare Gate

2

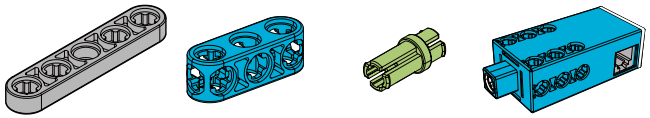

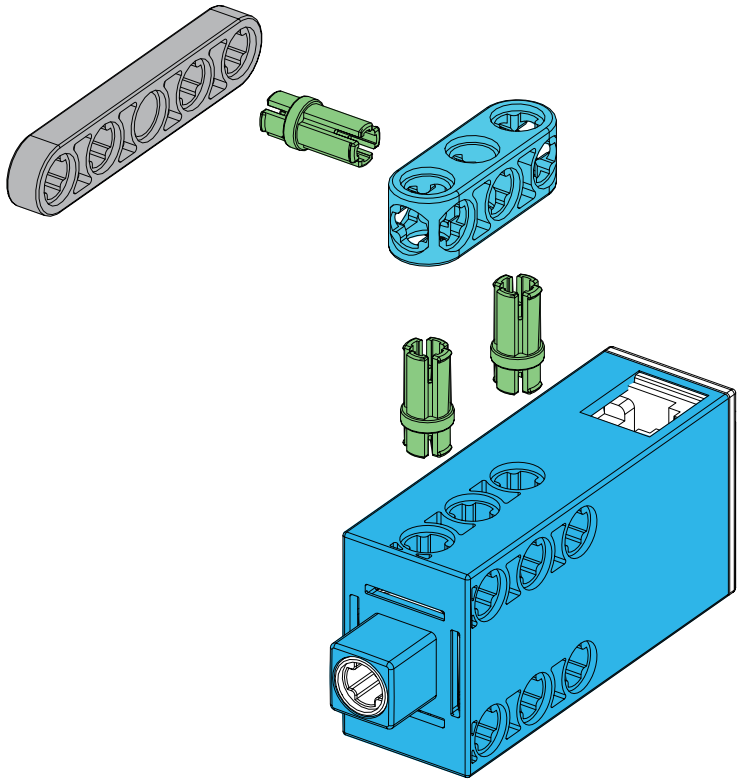

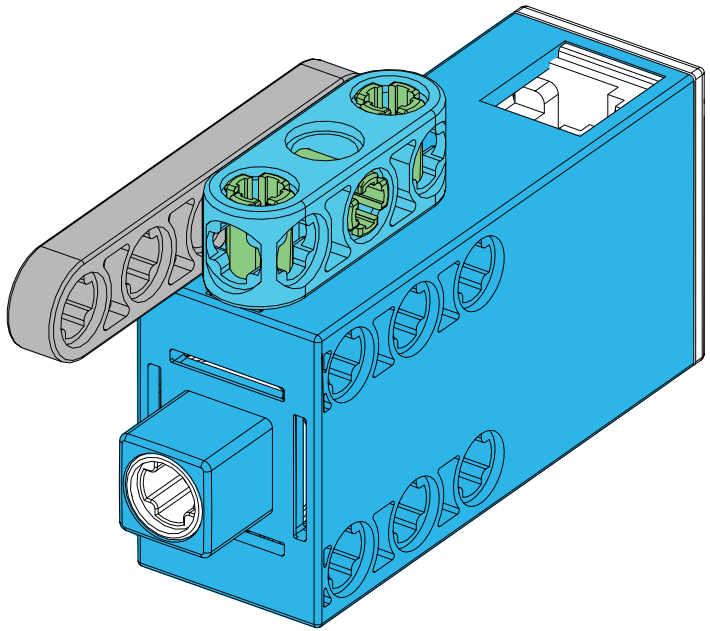

Fare Gate

3

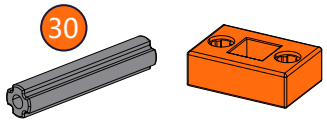

x1

x1

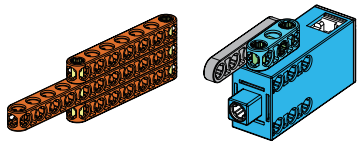

#1 #2

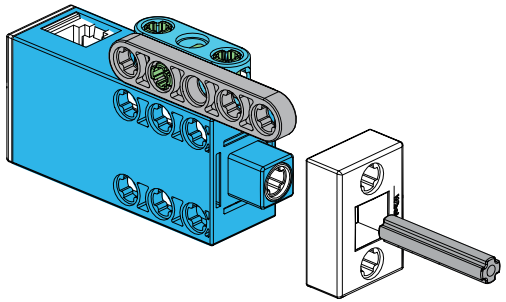

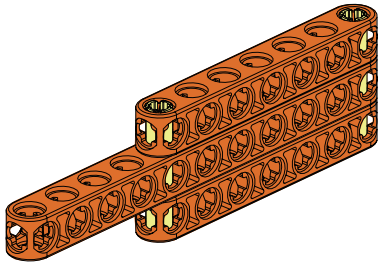

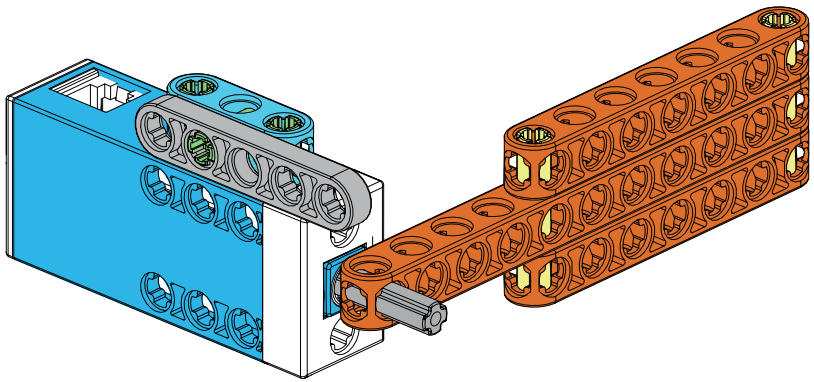

Fare Gate

4

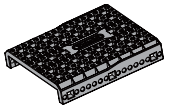
x1


x1

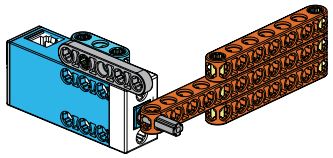
#3

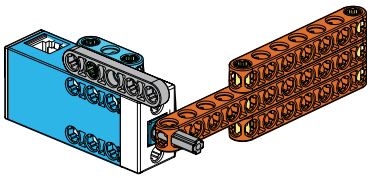



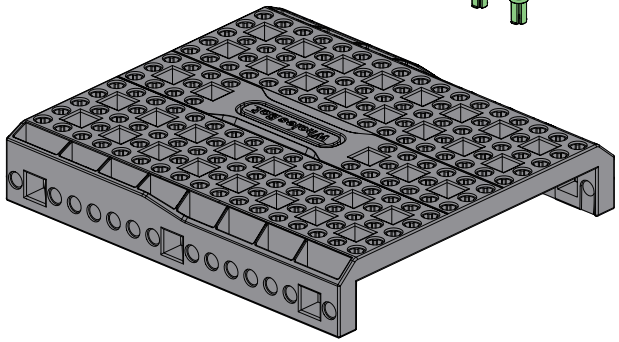

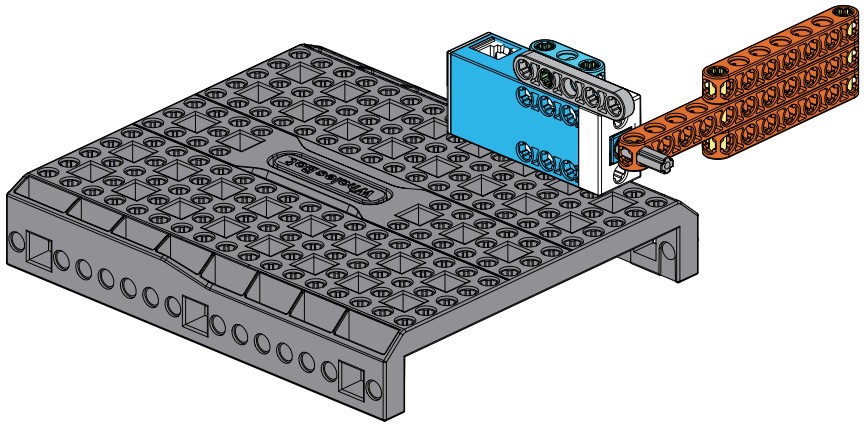

Fare Gate

5

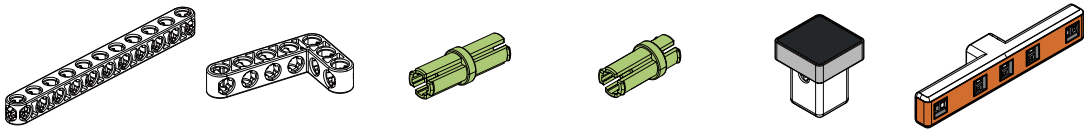

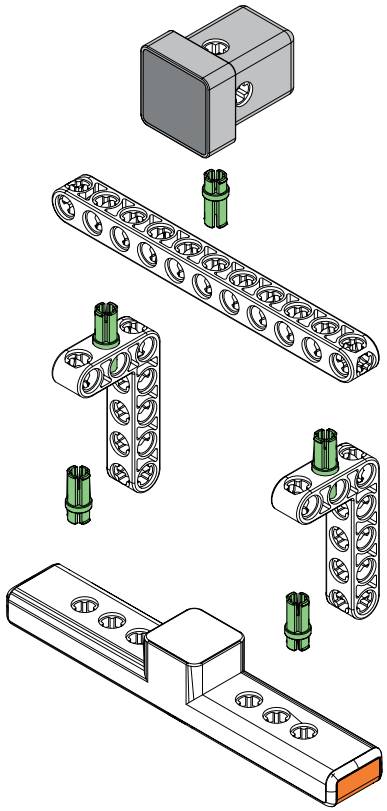

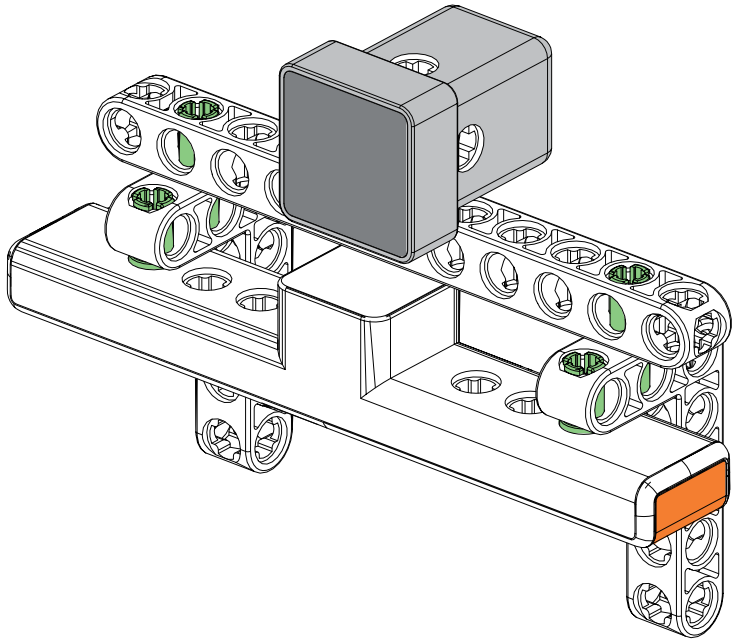

Fare Gate

6

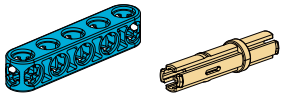

x4

x4

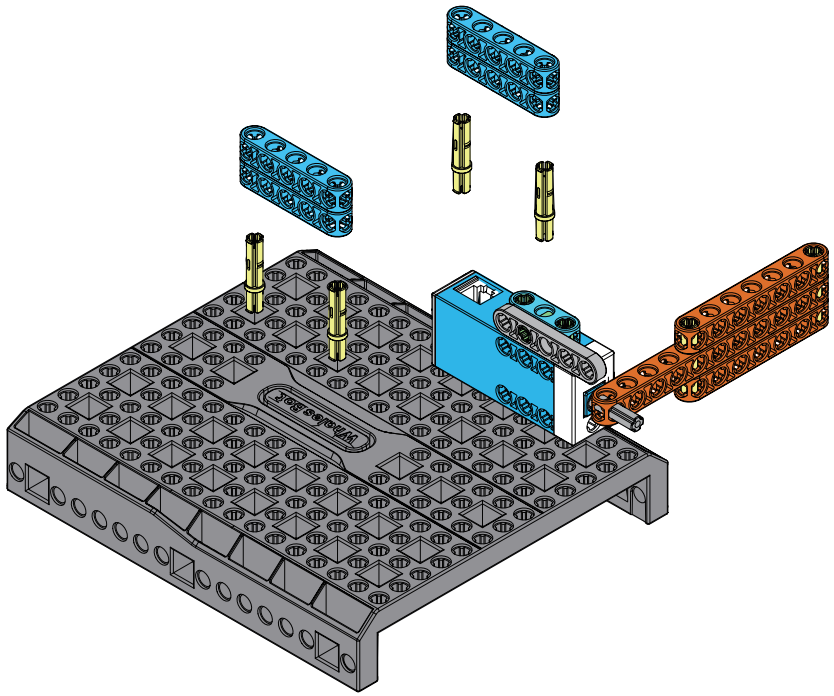

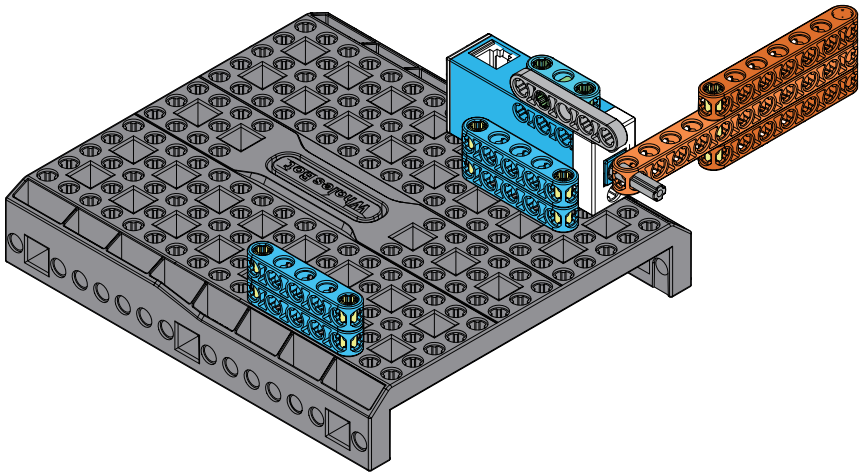

Fare Gate

7

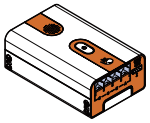
x1


x4

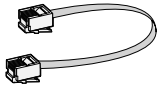
x3

