Old-fashioned Telephone

Old-fashioned Telephone

Basic Teaching Information					
Teaching facility	AI Module 1	Teaching mode	Project-based learning	Class duration	90 minutes

Teaching Objectives:

In this lesson, by learning the course and under the guidance of the teacher, the students shall:

• Know the teaching aids, the use and building of structural pieces and couplings.

- Learn the structure of the telephone
- Know the phone call wording (answering the phone, making a call).

Key Points and Difficulties

- Know each component
- Correctly build the structure of the telephone
- Understand and master phone number of the police, ambulance and fire

Old-fashioned Telephone

Step 1 Introduction of the Topic

Dear kids, today I’ m going to tell a story about a kid named Xiaohua, whose parents were on work that day, leaving Xiaohua and her Granpa at home. By noon, Xiaohua told Grandpa: Grandpa, I am so hungry~. Grandpa said: I see~ I’ m going to make something to eat for you now. After lunch, Grandpa took a rest. After a while, Xiaohua found that the kitchen was on fire. She immediately asked her Grandpa to extinguish the fire, but Grandpa was accidentally injured. Xiaohua was extremely anxious, what should she do?

Can you think of ways to help Xiaohua? Who should she ask for help then?

Ask the students to speak their minds.

- Ask the students if there is a telephone at their home?

Ask the students to speak their minds.。



Step 2 Topic Analysis

- Design the shape of a telephone

Guide the students to design their own telephone on the blackboard.

- What does a telephone consist of?
- What components can be used to build a telephone?

Old-fashioned Telephone

Step 3 Start the Hands-on

Guide the students to build an old-fashioned telephone and explain the structure.

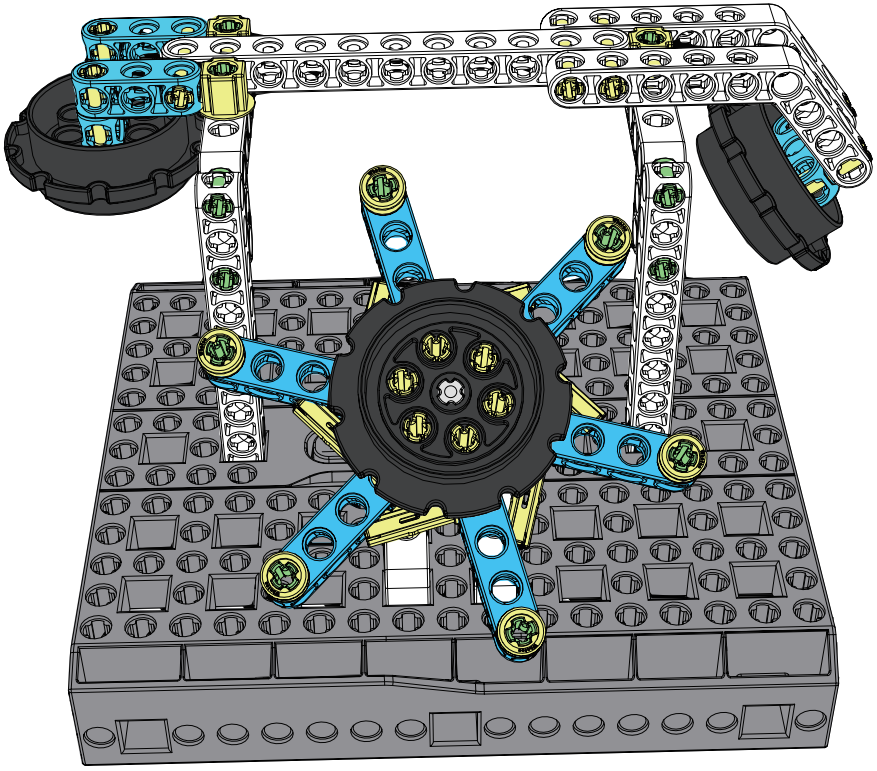

Step 4 Contents Assessment

Post-class summary, which can be reflected by multiple choices or true or false questions as far as possible, other than gap filling or questions

For example, which parts of the telephone we did today consists of?

What pieces did we use today to build a telephone, etc., to emphasize the knowledge.

Step 5 Display of Outcomes

Ask the students to present their outcomes to their parents.

Introduce what we did today? Old-fashioned telephone!

Is a telephone a household appliance?

Old-fashioned Telephone

1


x2

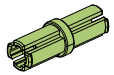
x2

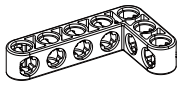
x2

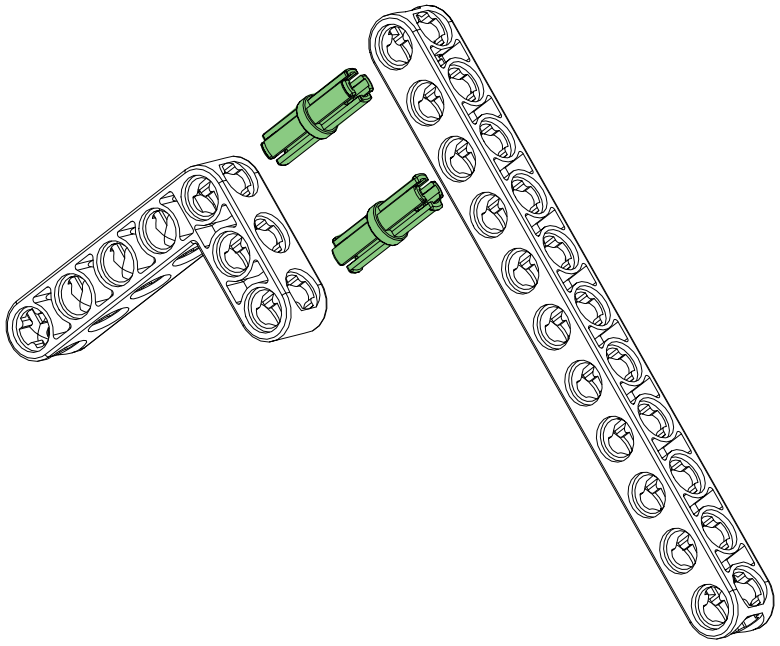
x2

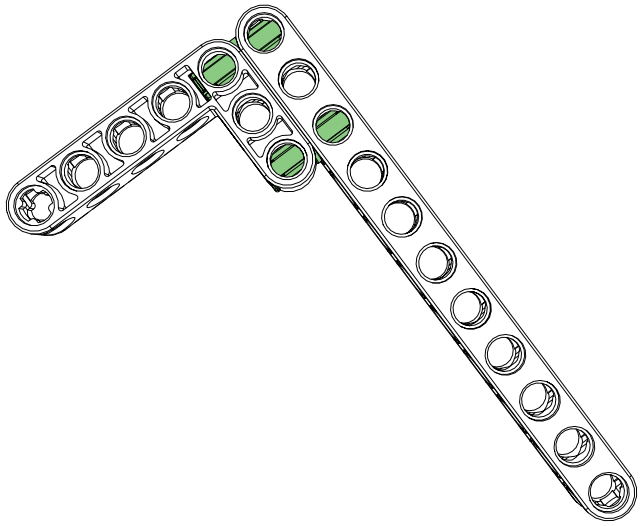

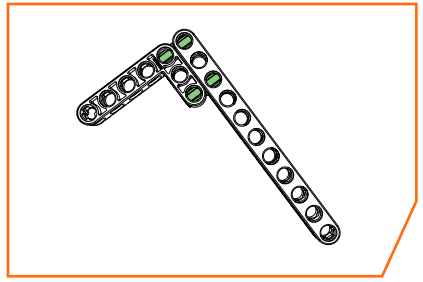

Old-fashioned Telephone

2

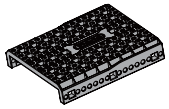
x1

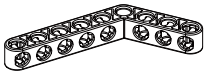
x2

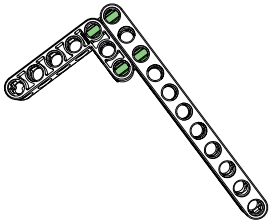
#1

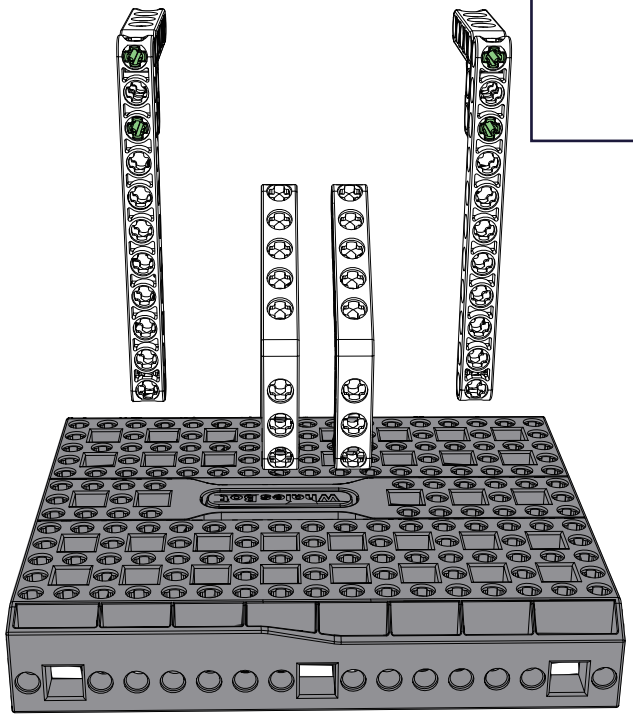

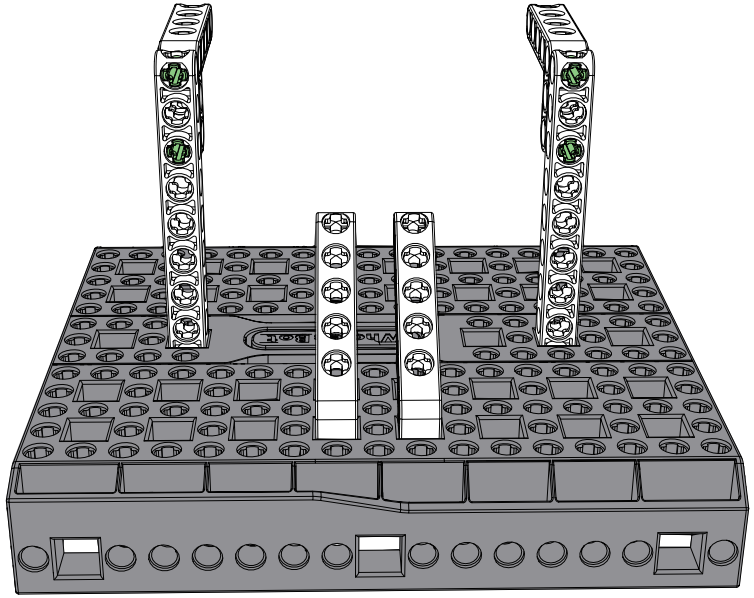

Old-fashioned Telephone

3

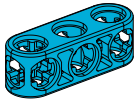
x1

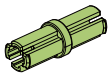
x5


x3

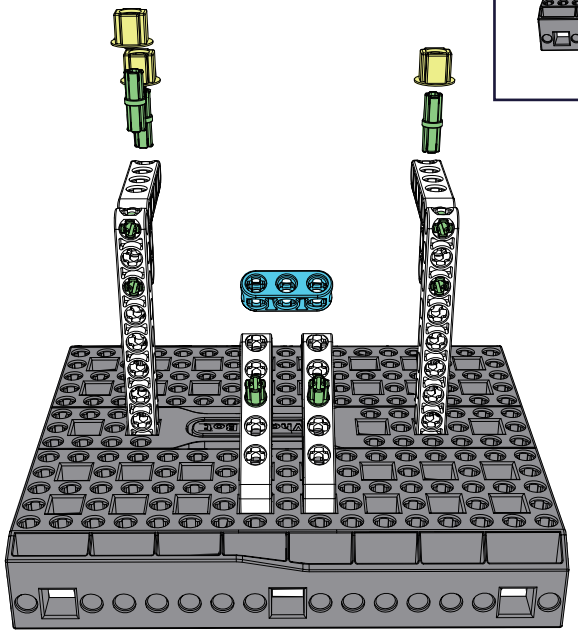

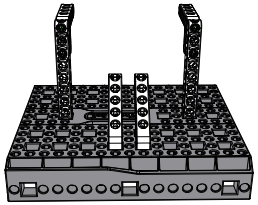
#2

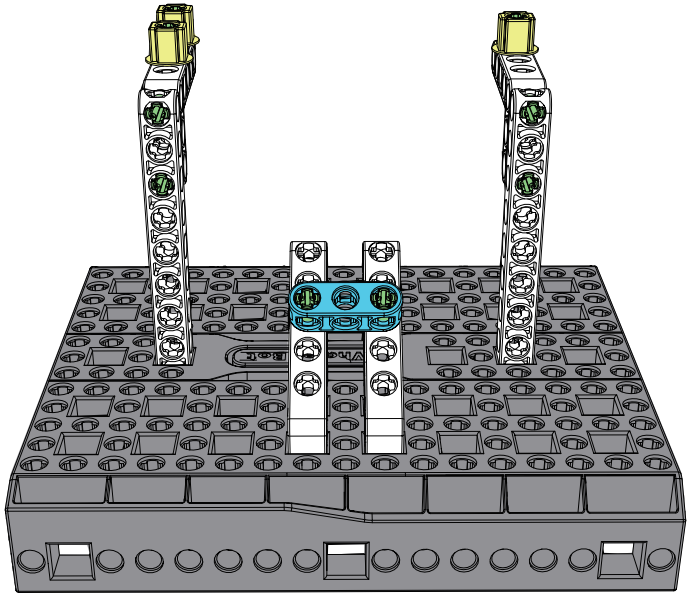

Old-fashioned Telephone

4


x1

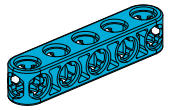
x6

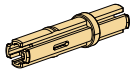
x12

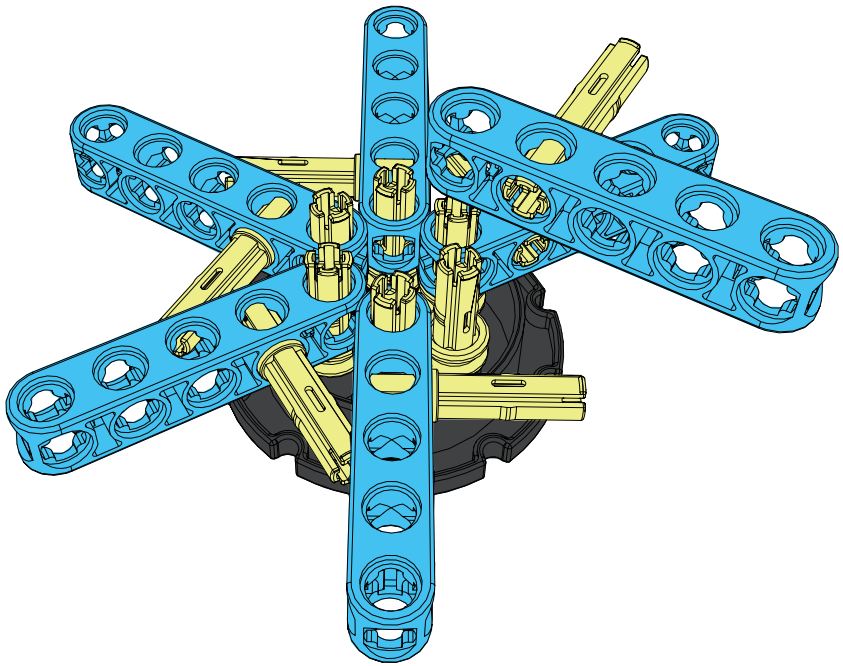

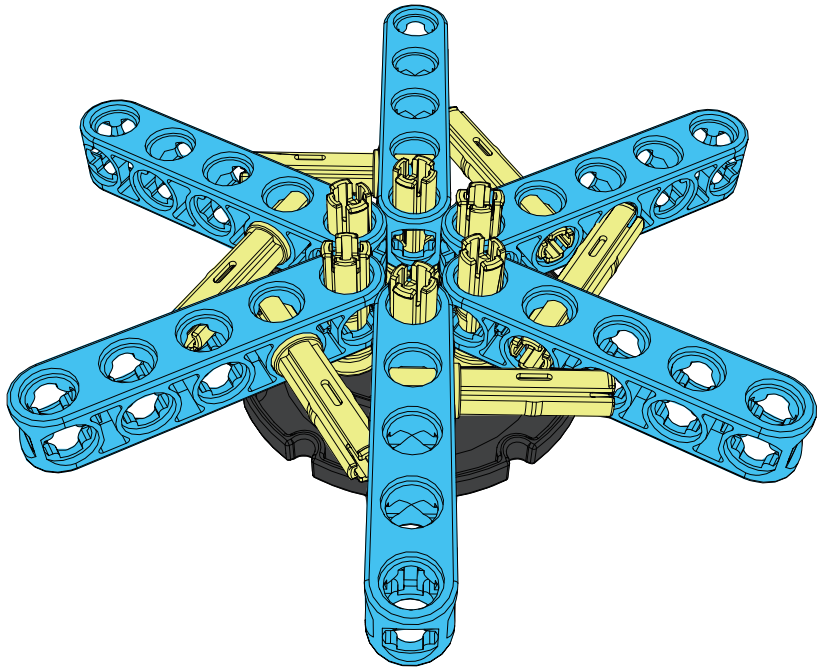

Old-fashioned Telephone

5

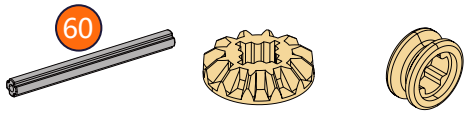

x1

x1

x1

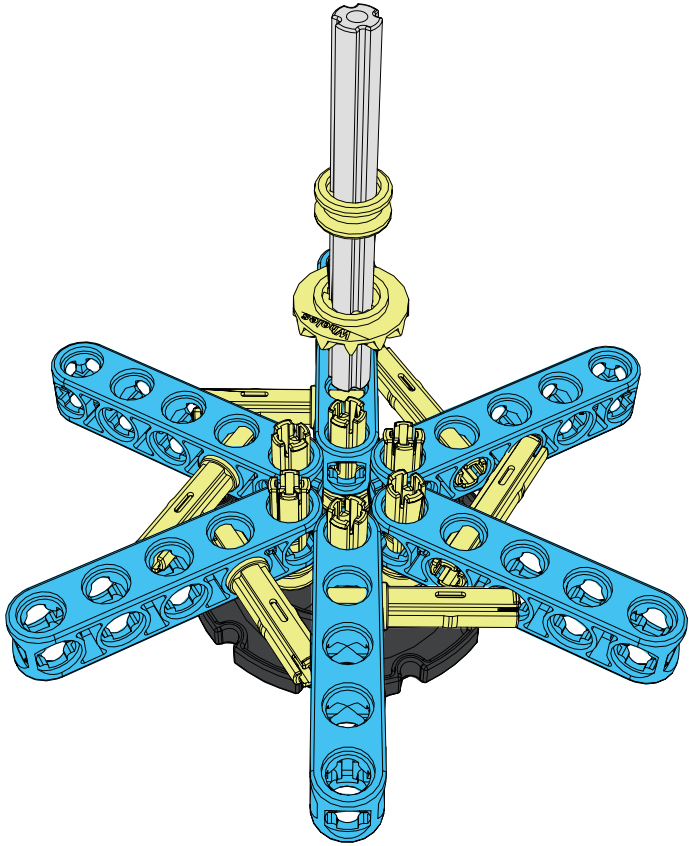

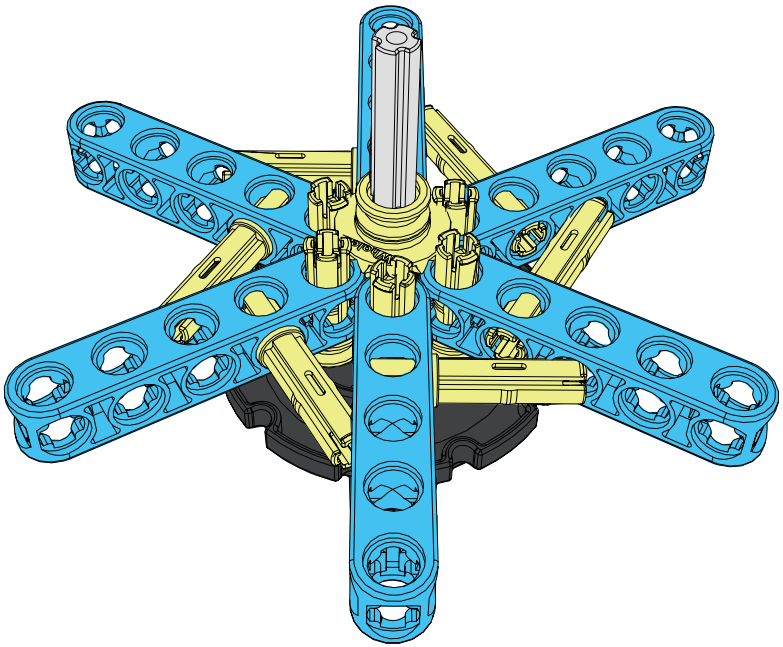

Old-fashioned Telephone

6


x6


x6

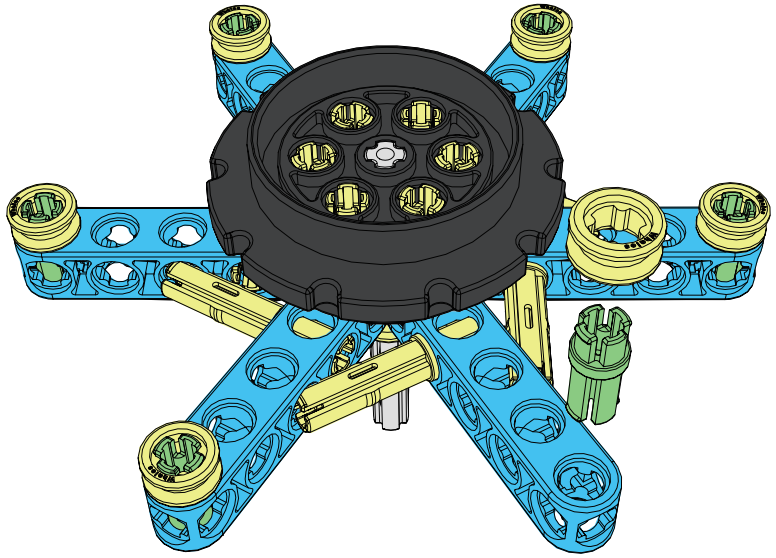

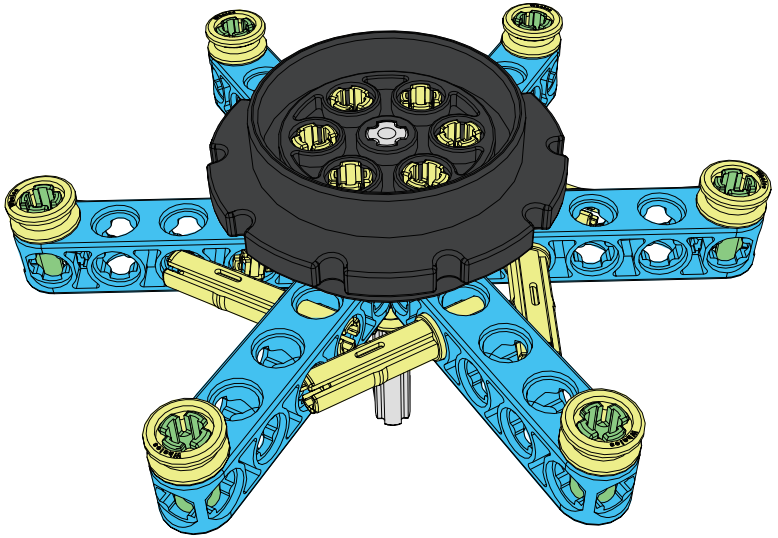

Old-fashioned Telephone

7



x1

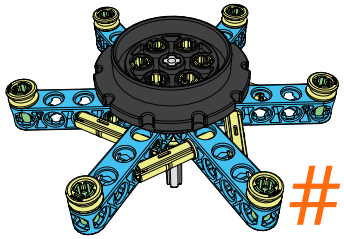

#6

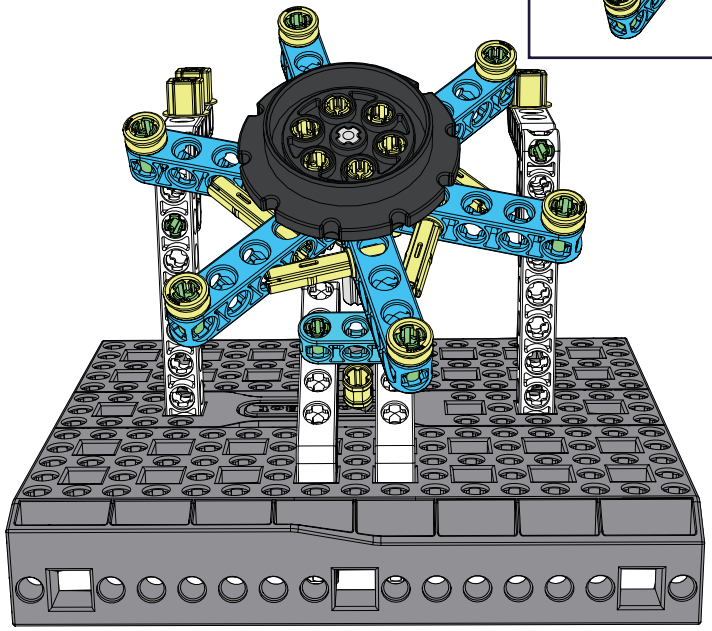

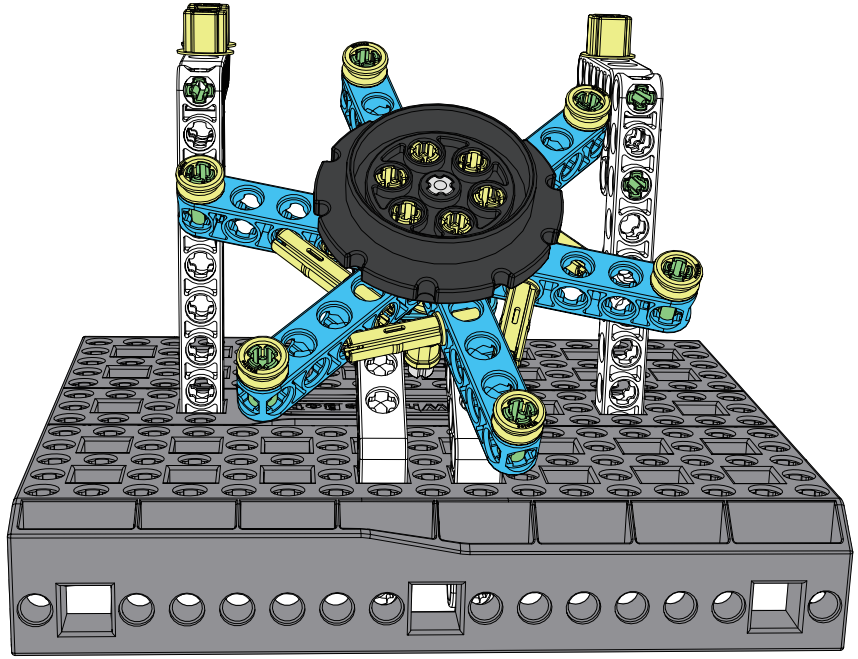

Old-fashioned Telephone

8

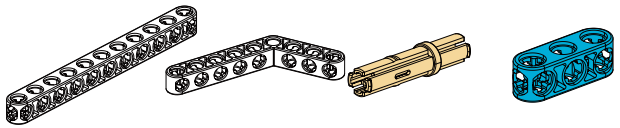

x1 x2 x3 x2

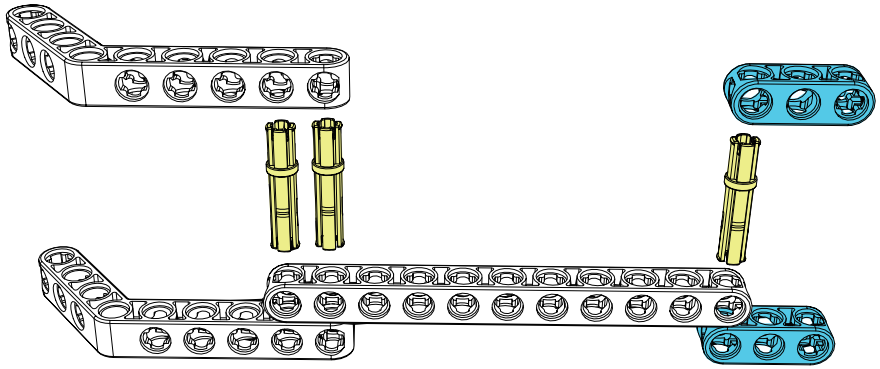

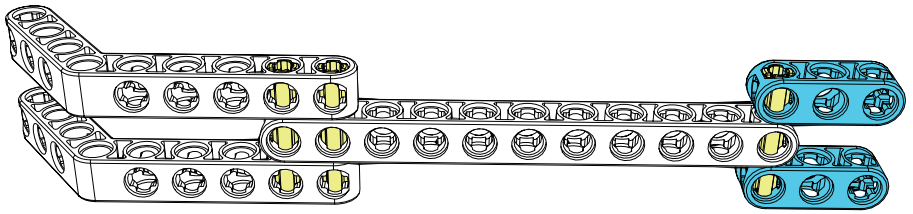

Old-fashioned Telephone

9


x2

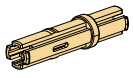
x4

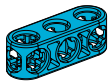
x2

