Learning Series
Balance



This robotics kit is a building block programming robot research and development by Joinmax.

The kit is equipped with various sensors such as sound sensitivity, color sensor, touch sensor, photoelectric sensor, color light, ultrasonic, camera and many building blocks parts. Students can build various building block robots with their imagination, and use graphical programming software to program the robot and experience the joy of hands-on creation.

Learning Target

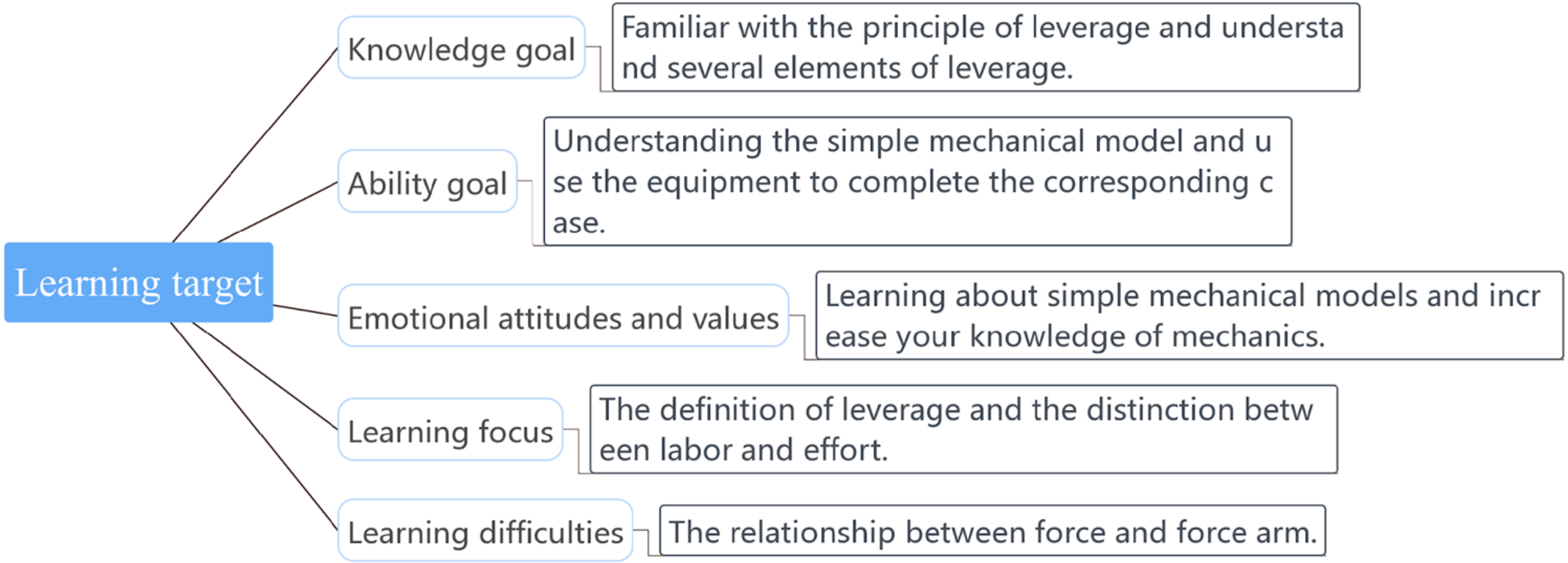

Contents

1 Course introduction

2 Teaching new knowledge

3 Task practice

4 Test effect

Course Introduction



Course Introduction



Is above picture use the principle of leverage?

According to records, as early as 1500 BC, the Egyptians had already used the balance. Although the balance of ancient Egypt is very rough, it has the outline of a modern balance and has become the prototype of a modern balance.

Course Introduction

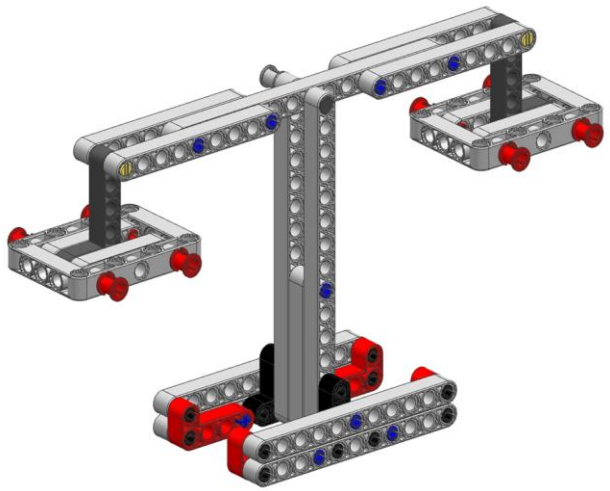

Balance

Know about the Balance

The balance is typical of the use of equal force levers. Using the principle of leverage, we place the weighed object on one side of the balance and the weight of the known weight (mass) on the other side.

The balance is used to weigh the mass of the object. In the narrow sense, it is also called the pallet balance (multiple pallet balances in the laboratory). The commonly used precision is not high, and is composed of a tray, a pointer, a beam, a ruler, a swimming code, a weight, a balance nut, an indexing plate, and the like.

Teaching New Knowledge



Teaching New Knowledge

Several principles are involved in the principle of leverage: power, power arm, resistance and resistance arm.

Element symbol:

Power - f1

Resistance - f2

Power arm - l1

Resistance arm - l2



Teaching New Knowledge

Force: refers to the force acting on the lever structure, which is represented by power and resistance.

For example, if you need to shake an object, the force we need to apply is the power (to make the structure change), and the gravity of the object itself will hinder us (the body feels heavy when it is squatting), this force is the resistance (the gravity of the object is the resistance) a form).

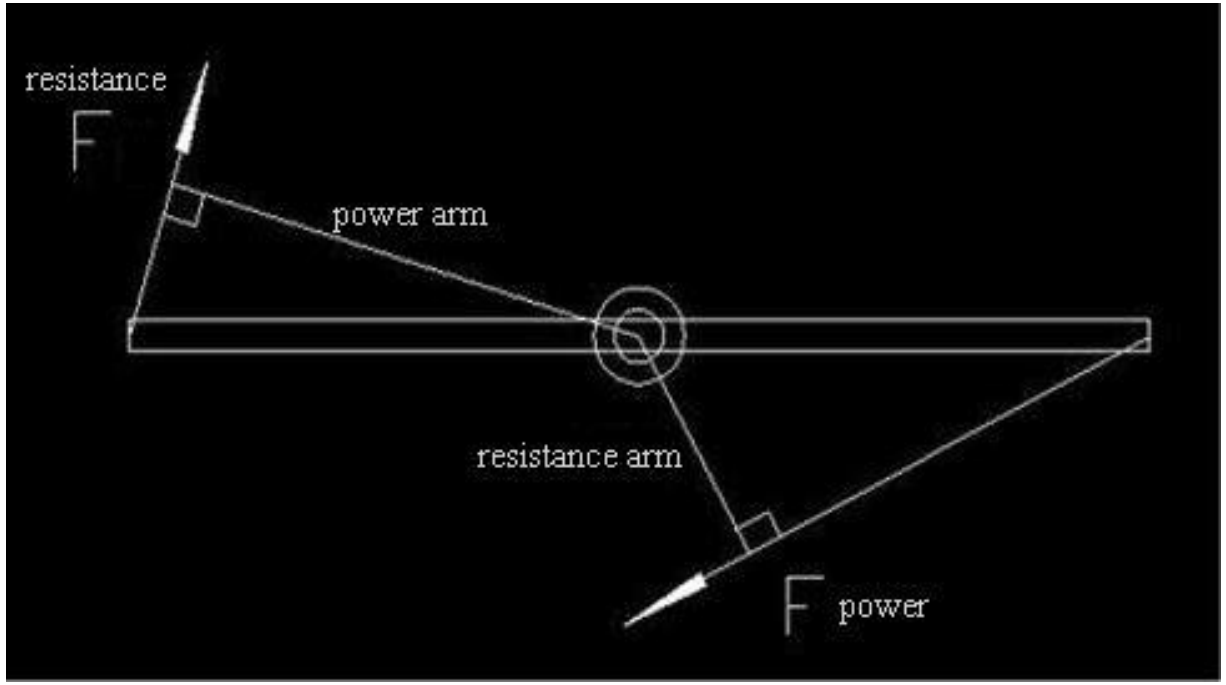

Teaching New Knowledge

Force arm: The force arm refers to the distance from the fulcrum to the extension of the force. It is an abstract mechanical concept. It does not refer to a specific lever. Students should pay attention to the distinction. Thus extending out, through the fulcrum and perpendicular to the extension of the power direction, this distance is the power arm; through the fulcrum and perpendicular to the extension of the resistance direction, this distance is the resistance arm.

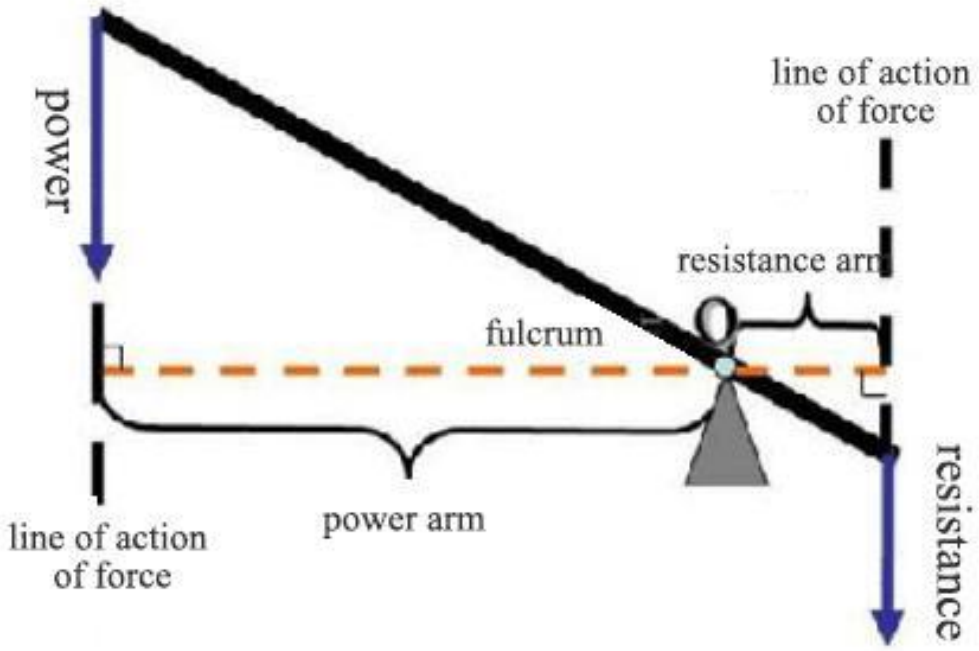

Teaching New Knowledge

When the power arm is larger than the resistance arm, this is a labor-saving lever; the power arm is smaller than the resistance arm, which is a laborious lever; when the power arm is equal to the resistance arm, this is an equal-force lever.







Task Practice



Task Practice

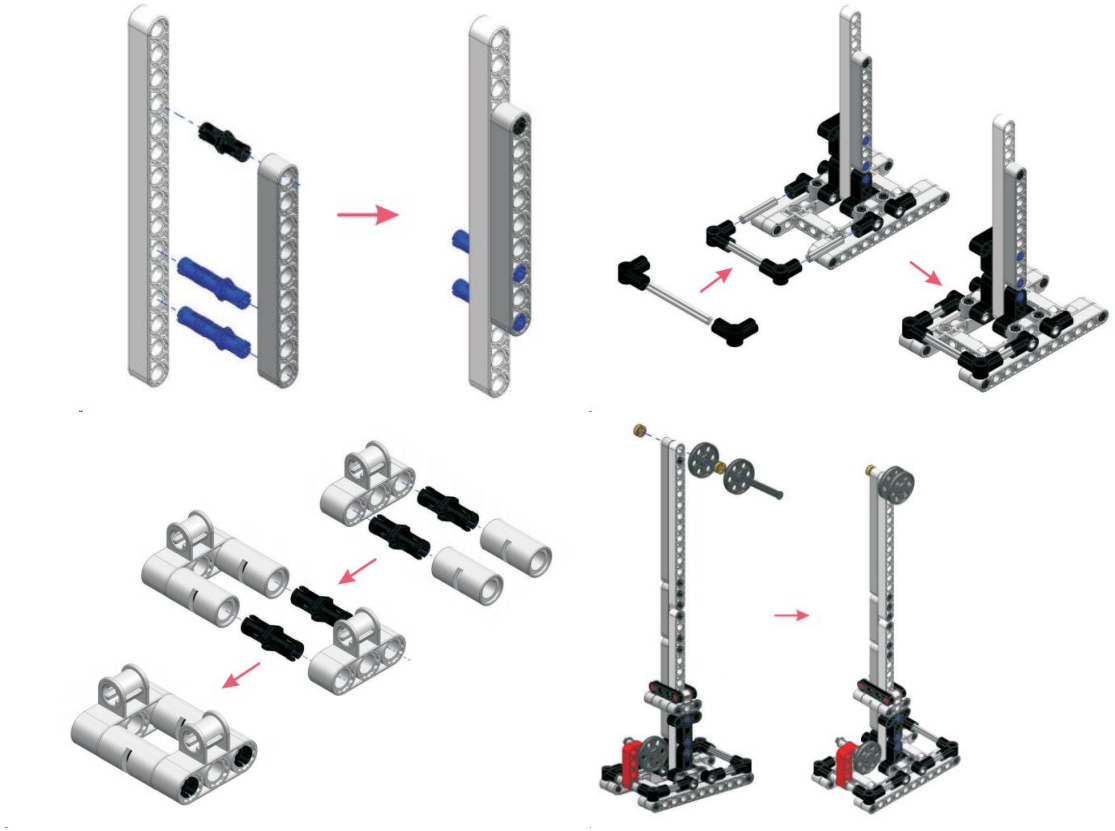

Assembly requirements

①Stable structure

②Proper gravity

③Shape match

Checking Effect



Test Effect



Reviewing the learning content and deepen the impression.

Question 1 What is the name of robot made today?

Question 2 What is force arm?

Question 3 Please indicate which type of leverage the balance belongs to.

Test Effect



Homework

1. Students please listen to the teacher to explain the balance operation specifications: first place the balance in a horizontal position, then level and swim the code to zero, the measurement object must not exceed the range, the weight is added to follow the principle of small to large.
2. Classmates please use your own balance to complete the weighing of the specified object to the teacher.
3. Organize the divergent imagination and make the appropriate weight. If the accuracy is improved, the balance nut, cursor, and dial part can be perfected according to the composition of the balance.

Thank you for watching

BE STEM READY

