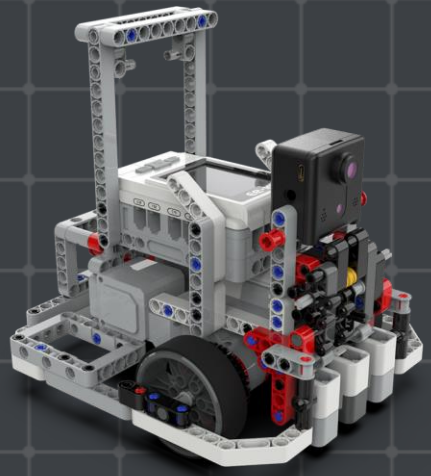

Lesson 22 | Parts Sorter |

Key points from this lesson:

1. Understand the concept of blocking in programming

2. Understand the difference between blocking and non-blocking programming modules

Possible difficulties from this lesson:

1. Learn to choose blocking or non-blocking programming modules according to actual conditions

Sorting process in the factory

In factories, the sorting process mainly involves classifying and organizing items according to certain rules and standards. For example, items are sorted according to their size to facilitate storage, management, and transportation.

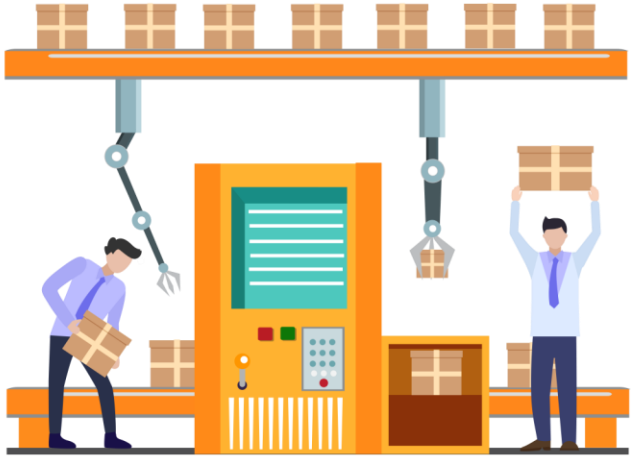

Automatic sorting

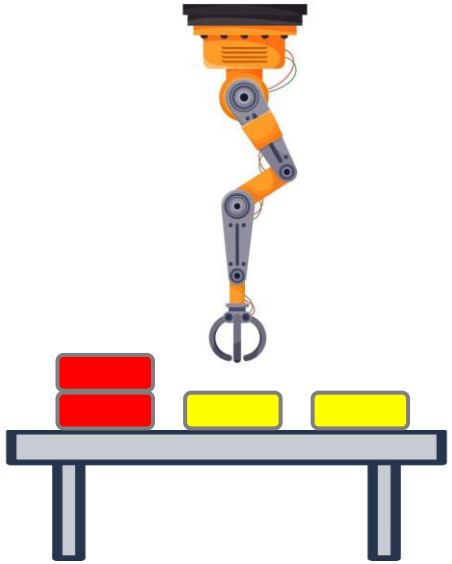

To improve the efficiency of sorting and reduce the error rate, automatic sorting devices are often used to let machines sort instead of manual work. For example, machines can sort and classify parts of different colors by color.

Effect Demonstration

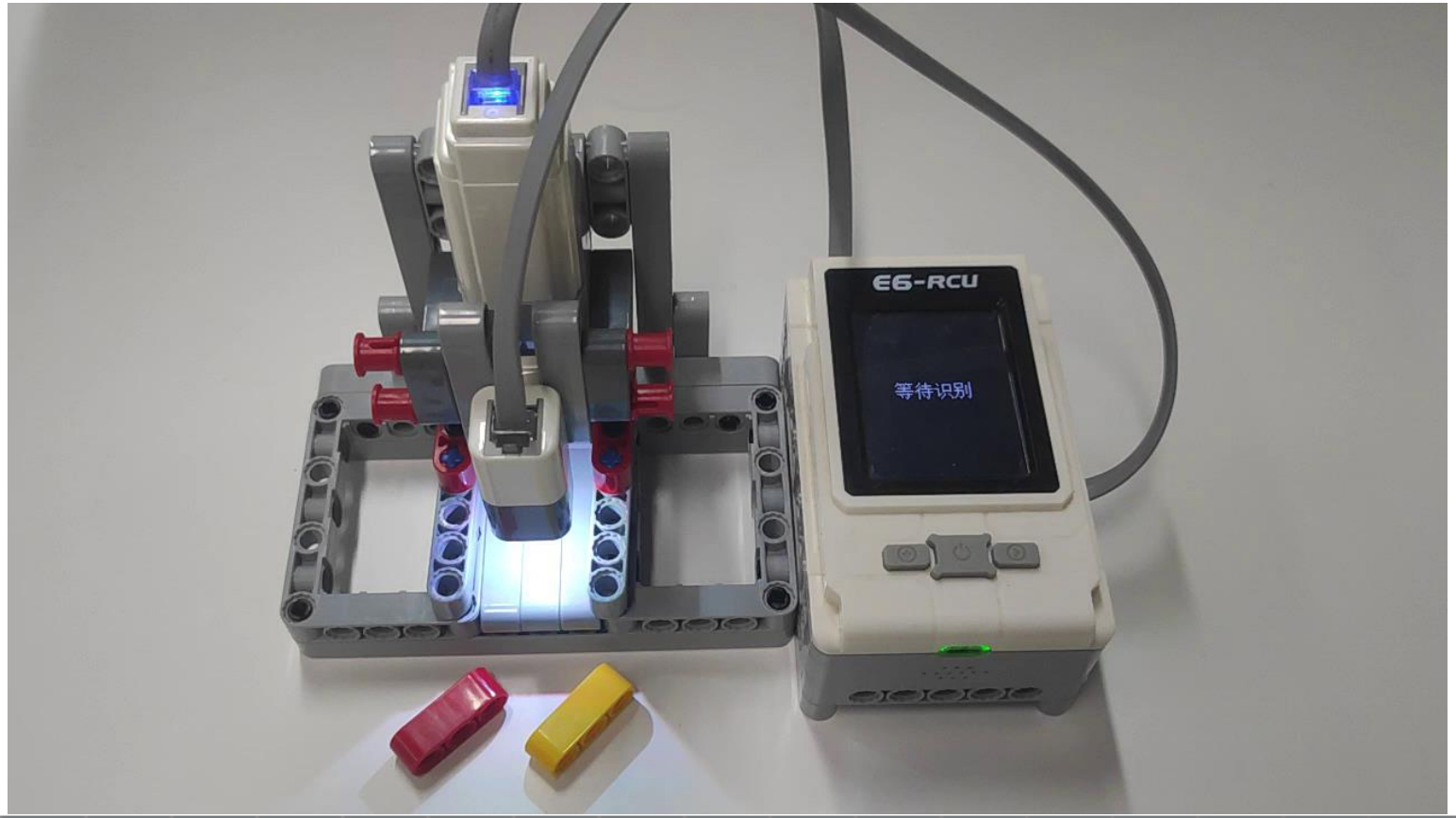

Project Tasks

Design a parts sorter model and control it using a color sensor.

Requirements for robot functions:

1. When red (yellow) building blocks are placed in the sorting area, the machine will push them to the left (right) area.
2. When no red or yellow) building blocks are recognized, "Wait for recognition" is displayed in the center of the screen.
3. When a red (yellow) building block is recognized, the buzzer will emit a sound, and the screen will display "Red / Yellow Parts”.

Build a robot

1

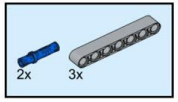

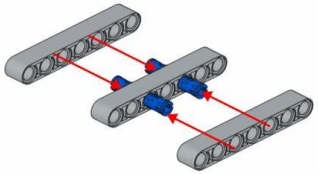

2

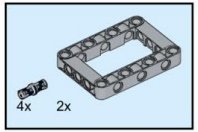

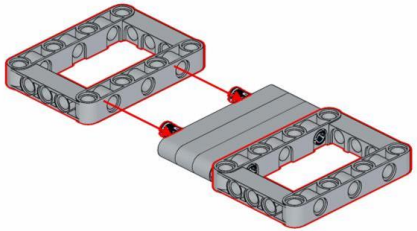

Build a robot

3

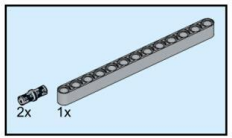

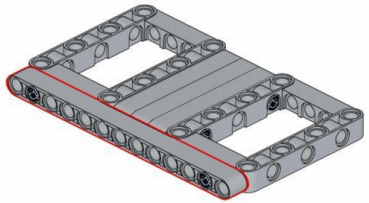

4

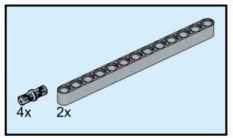

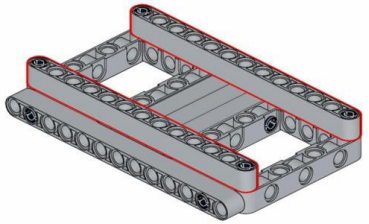

Build a robot

5

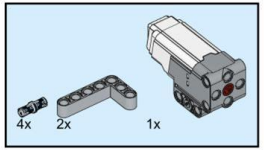

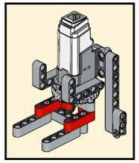

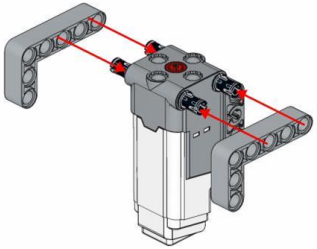

6

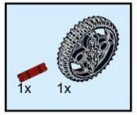

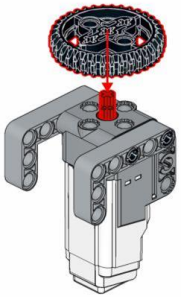

Build A Robot

7

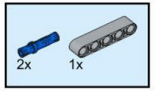

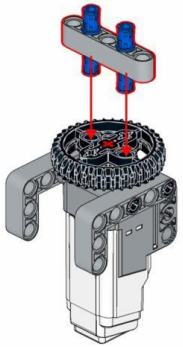

8

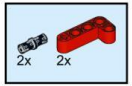

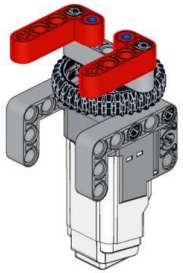

Build a robot

9

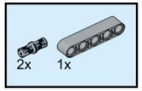

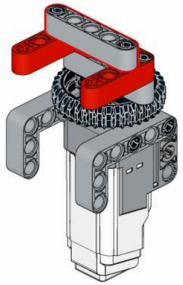

10

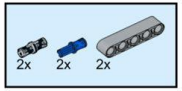

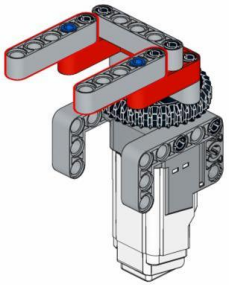

Install the fork

Build a robot

11

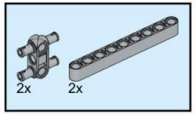

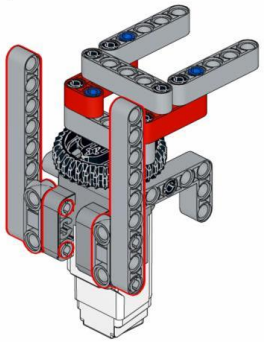

12

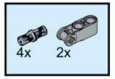

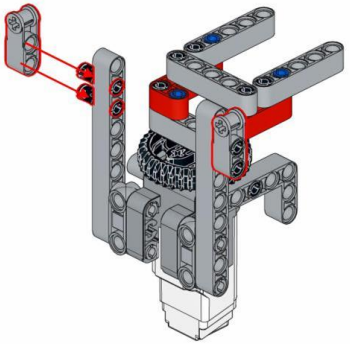

Build a robot

13 

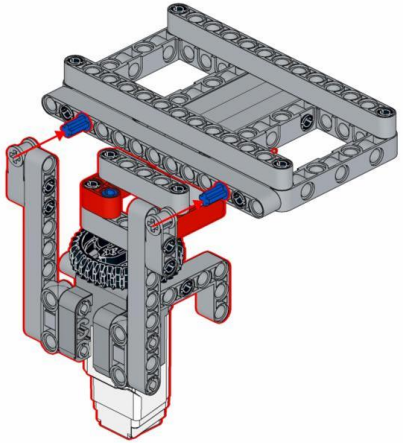

14 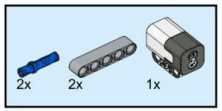

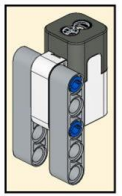

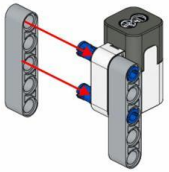

Build a robot

15



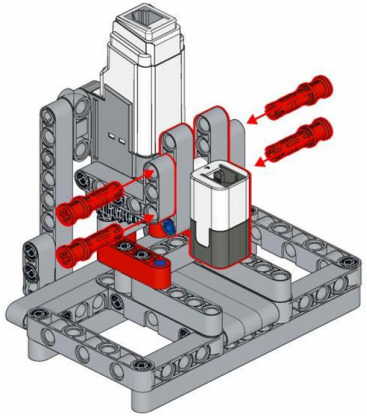

16

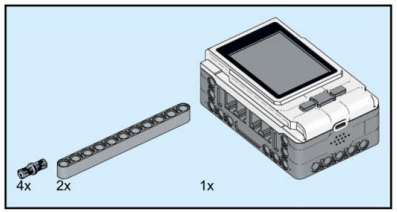

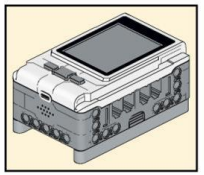

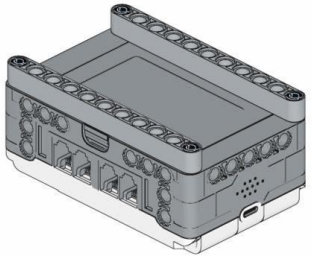

Build a robot

17 

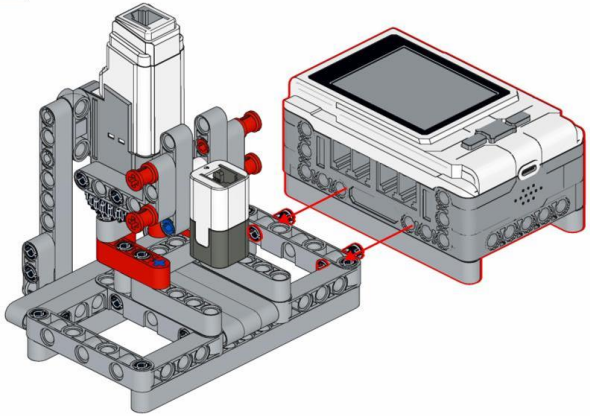

18

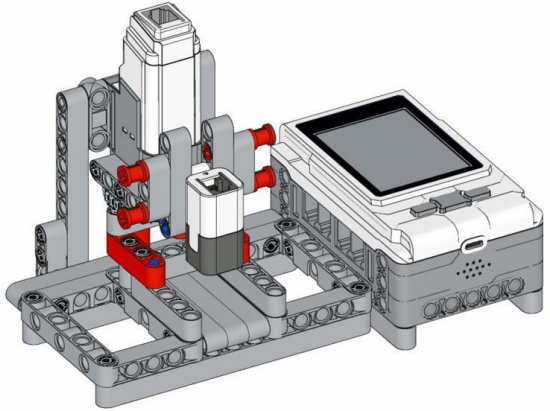

Install the controller

Hardware Connection

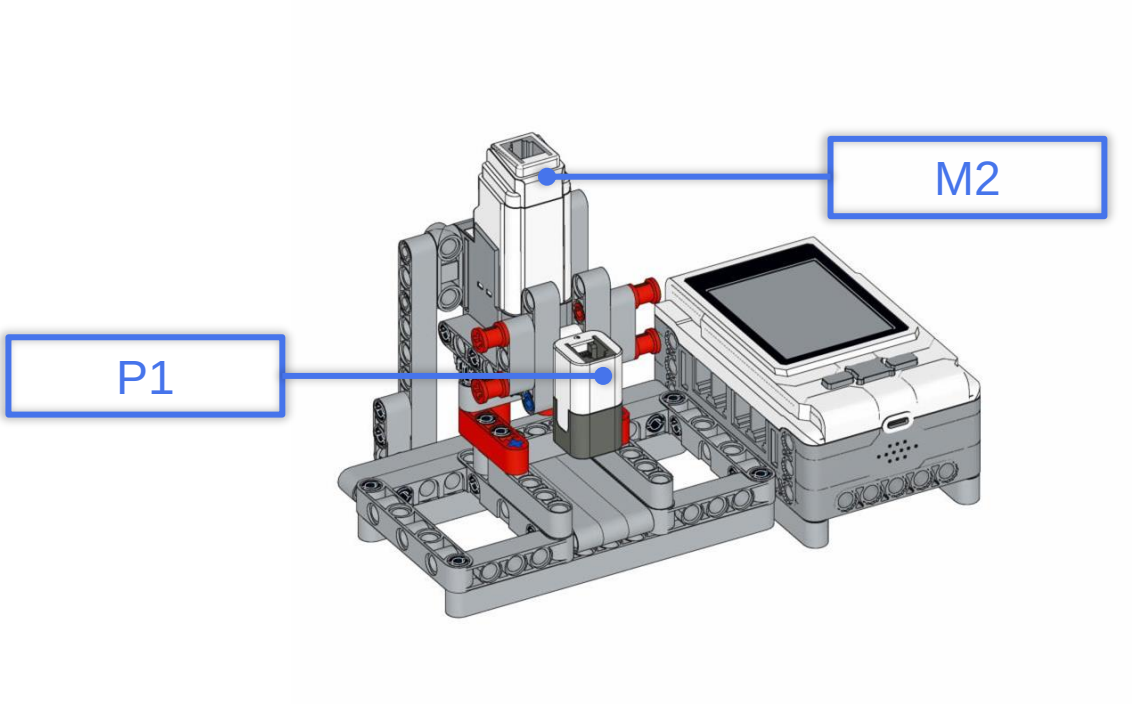

“

How do we achieve the required functions?

”

Coding block – waiting servo motor

This block allows the motor to rotate at a specified speed and angle without executing subsequent commands.

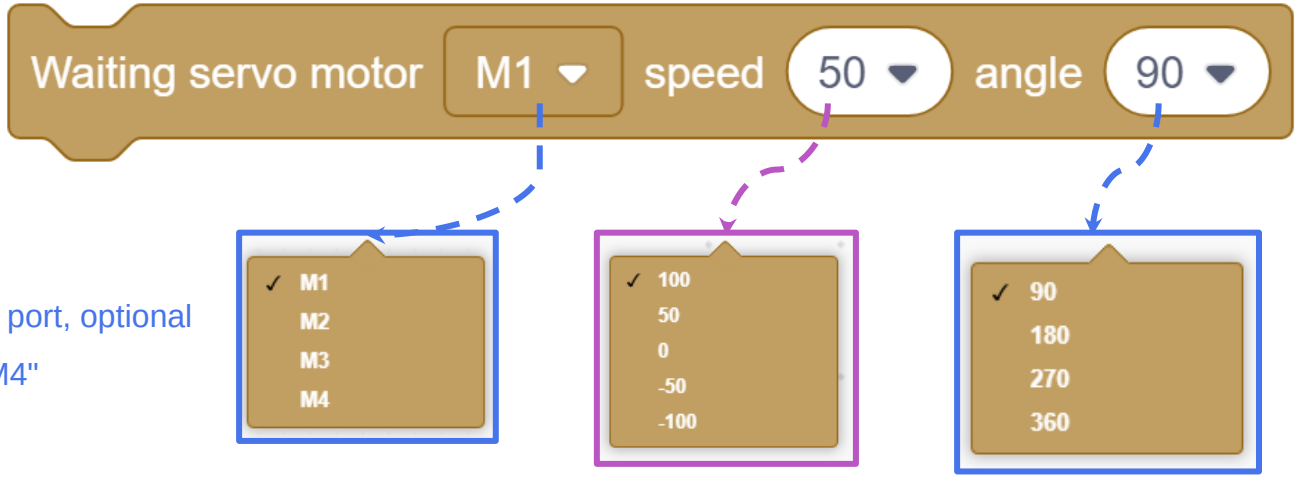

Motor port, optional "M1-M4"

Motor speed, range: "-100~100", "+" or "-" represents the direction of rotation

The angle of motor rotation, value range: 0~3600

Blocking in programming

In programming, blocking means that during the execution of an instruction, the program is suspended until the instruction is completed or a certain condition is met.

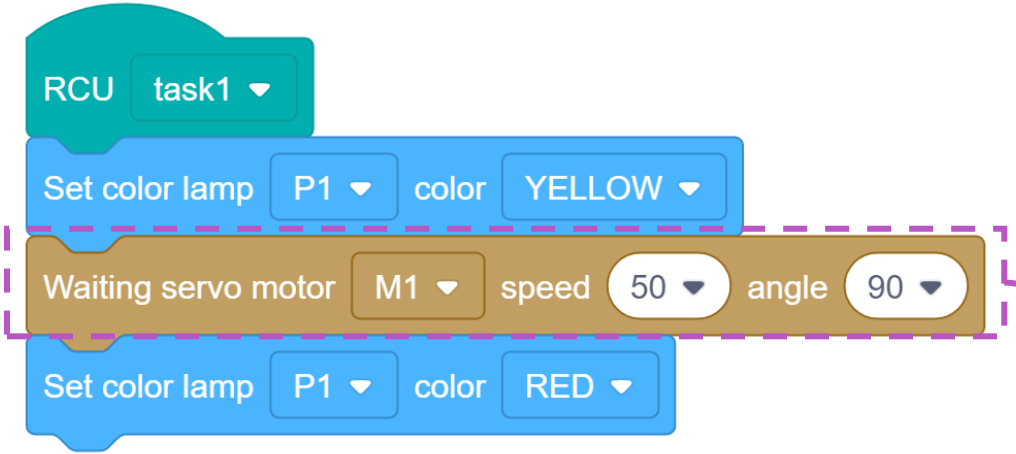

When the program runs here, it will wait for the motor to rotate at the specified angle, and then execute the program below it.

Blocking and non-blocking modules

Blocking programming modules typically use the word "wait", while non-blocking programming modules do not.

Type	Description	Examples
Blocking	Subsequent instructions will not be executed until the blocking module has finished running.	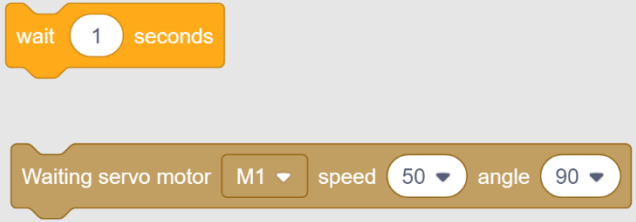
Non-blocking	When the non-blocking module is running, it does not affect the subsequent instructions.	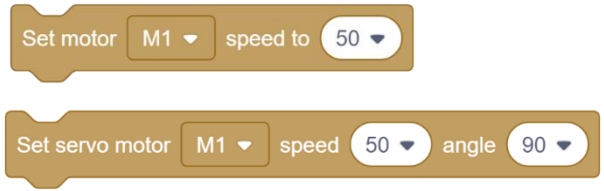

The text will be displayed only after the motor stops rotating

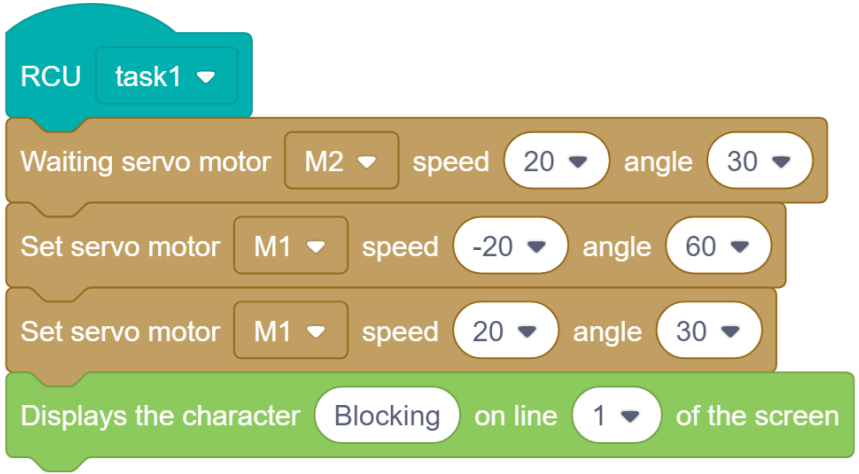

The motor rotates 30 degrees forward and 30 degrees reverse. After rotating 30 degrees forward, text is displayed on the screen.

Download the program and run the test.



Get encoder values with the built-in test function

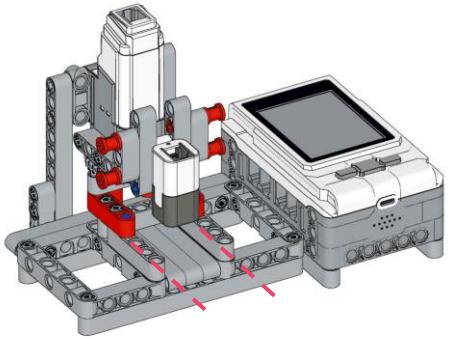

Please manually move the sorter’s sorting fork to the center position and enter the " Test - Encoder“ in the controller.

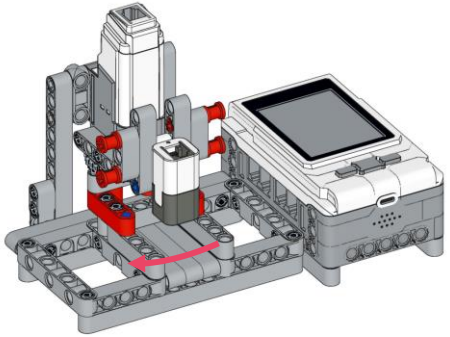

Turn the fork clockwise to the far left and record the encoder value.

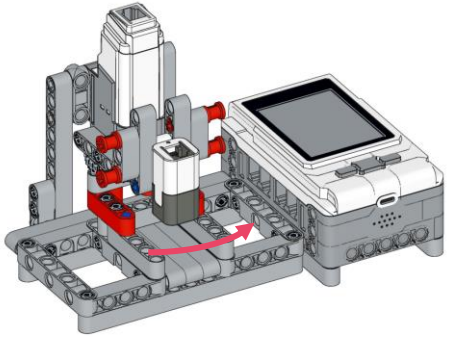

Turn the fork clockwise to the far right and record the encoder value.

Determine the angle of rotation

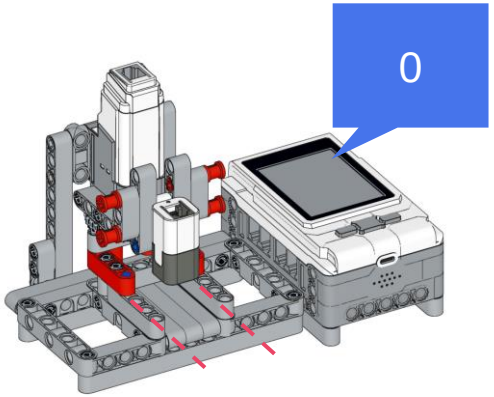

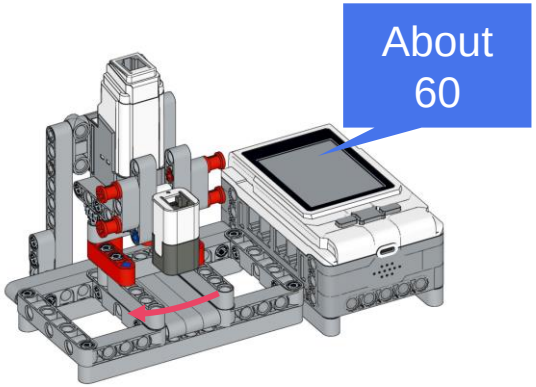

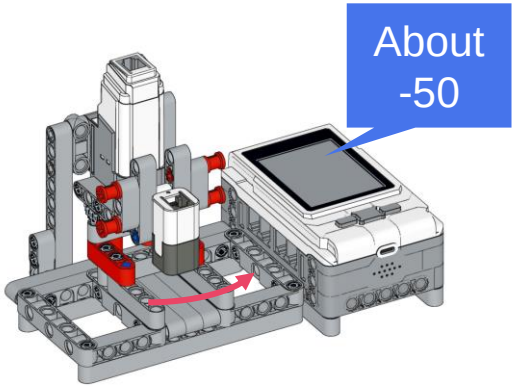

Through testing, we can get the maximum rotation angle of the shift fork when it moves from the middle position to the left or right. When programming, it is important to ensure that the rotation angle of the shift fork does not exceed the maximum rotation angle.

1. Sorting red parts

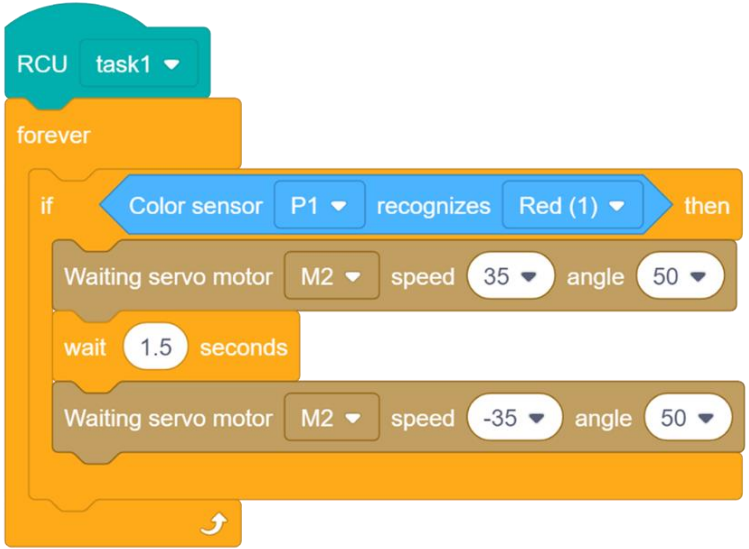

When a red part is identified, it rotates clockwise and sorts it to the left, and the sorting fork returns to the center.

2. Sorting yellow parts

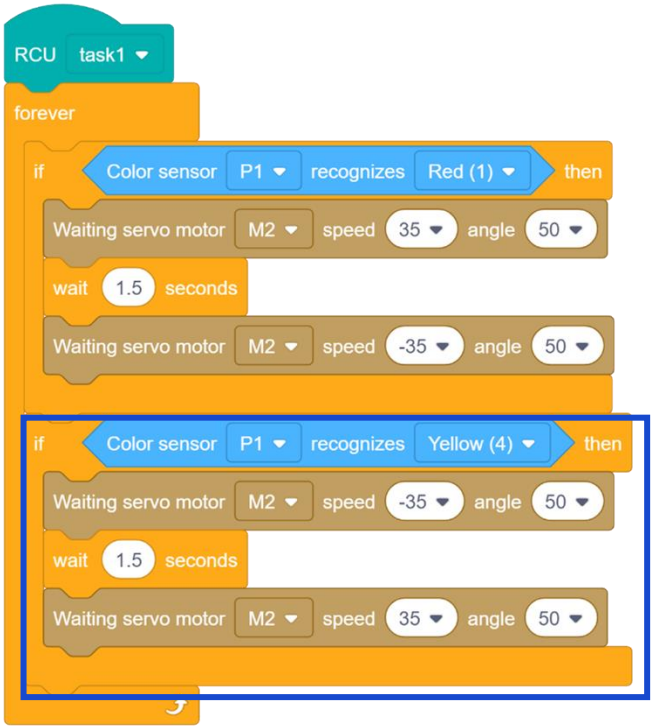

When a yellow part is identified, it rotates counterclockwise and sorts it to the right, and the sorting fork returns to the center.

3. Sound prompts



When a red or yellow part is identified, the buzzer will sound once before sorting.

4. Display text prompts on the screen

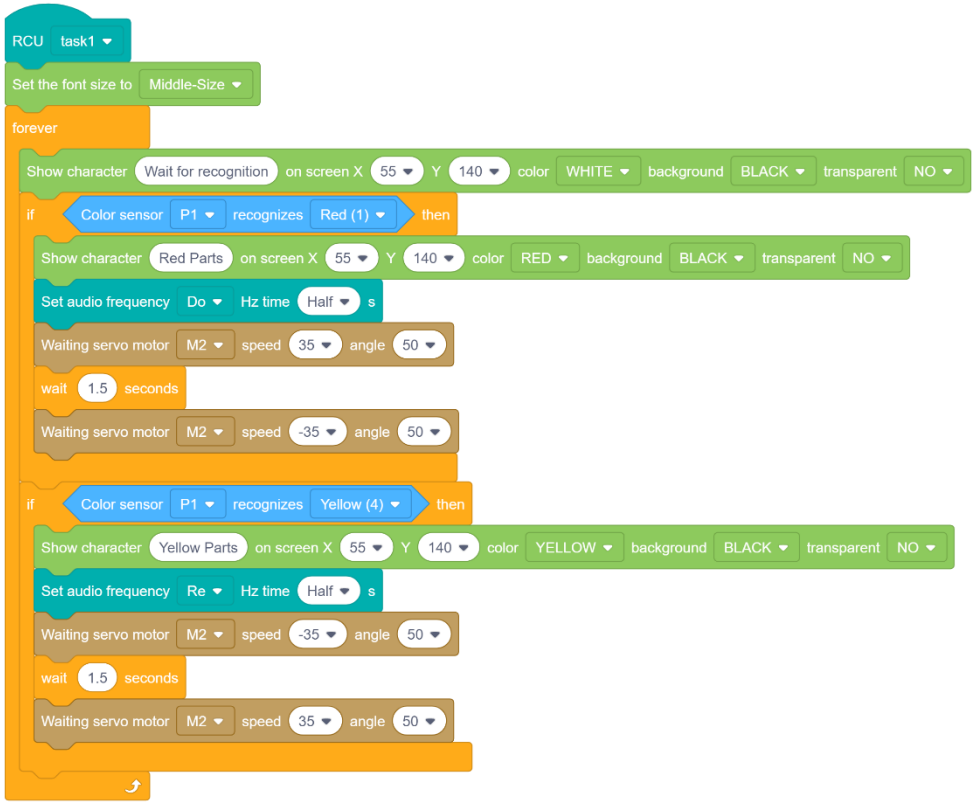

Set the font size first. When sorting is not in progress, the screen displays "Wait for recognition" in the center.

"Red Parts" is displayed when sorting red parts, and "Yellow Parts" is displayed when sorting yellow parts.

Expansion Tasks

When initializing, let the sorting fork automatically reset to the center.



Expansion Program

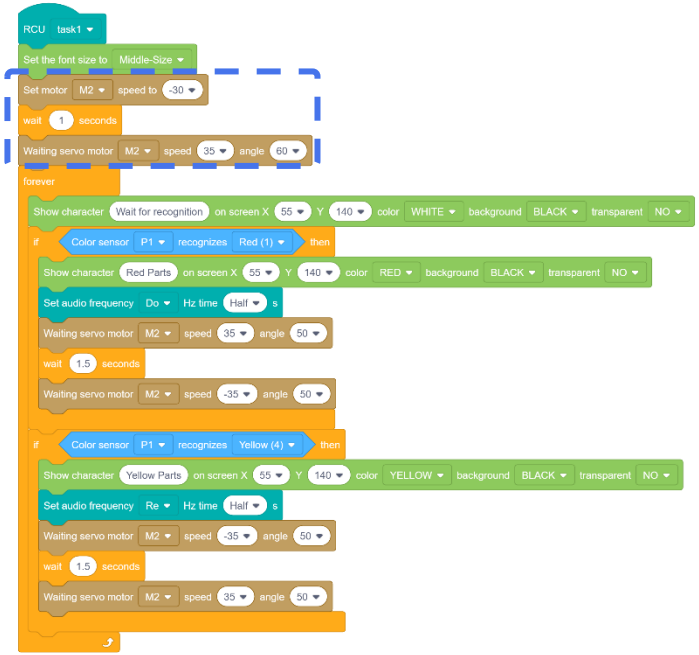

First, turn the fork counterclockwise to the rightmost end, and then turn it back to the center position.

Because there is a certain deviation in the angle after turning back and forth, the angle can be adjusted according to the actual situation.

Quiz

Single-choice question

Regarding blocking in programming, the following description is incorrect ( )

A. The program execution is suspended during blocking

B. Blocking programming modules will be repeatedly executed

C. Blocking programming modules usually have the word "wait"

D. When non-blocking modules are running, it does not affect the subsequent instructions

Answer: B

Further Reading

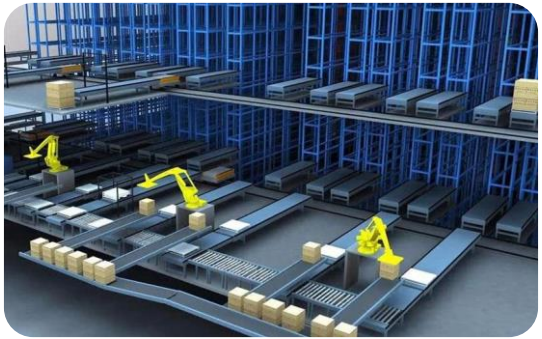

Automatic sorting systems are used in many fields to improve work efficiency, reduce costs and increase accuracy.

Automatic sorting equipment is most widely used in the field of logistics. It can quickly and accurately complete the classification and sorting of goods, improve logistics efficiency and reduce labor costs. Especially in the case of the rapid development of e-commerce, the logistics industry needs to handle a large number of parcels and express parcels. Automatic sorting equipment can effectively reduce the burden on staff and improve sorting speed and accuracy.

Further Reading

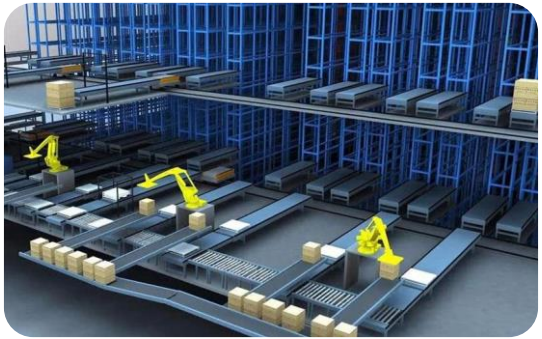

In the food processing industry, automatic sorting systems can be used for sorting, processing, and packaging of food raw materials. Through automated processes, production efficiency can be improved, labor costs can be reduced, and food safety can be ensured.

In the agricultural field, automatic sorting systems can be used for grading, classification, and packaging of agricultural products. Through machine vision technology, the system can automatically detect the size, shape, color, and other characteristics of agricultural products, and classify them quickly and accurately.

Thanks!