Learning Series

Pirate Ship



This robotics kit is equipped with various sensors such as sound, color, touch, ultrasonic, camera, etc. Students can construct various robots with imagination, program their functions and experience the happiness of creation.

Learning Target

01

Knowledge goal

The advantages and applications of belt drive.

02

Ability goal

Understand the use of belt drives in life. Build a pirate ship robot.

03

Emotional attitudes and values:

Learn to communicate with classmates and learn the strengths of others.

Learning Target

01

Learning focus

Pulley drive function to mitigate load shock

02

Learning difficulties

Advantages and disadvantages of belt drive.

Contents

01 Course Introduction

02 Teaching New Knowledge

03 Task Practice

04 Test Effect

Course Introduction



Course Introduction



Observing which kind of transmission principle he used in the above spinning car.

A belt drive is a mechanical transmission that utilizes a flexible belt that is tensioned on a pulley for motion or power transmission.

According to the different transmission principle, there is a friction type belt transmission which is driven by friction between the belt and the pulley, and a timing belt transmission which is driven by the belt and the teeth on the pulley.

Course Introduction

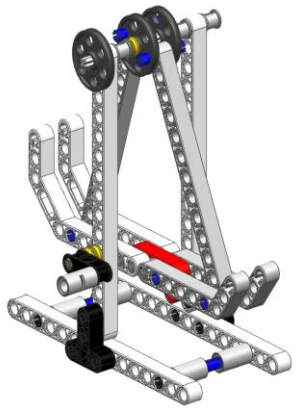

Pirate Ship

Meet the pirate ship

The pirate ship is a kind of car amusement machine. It is a kind of amusement project that reciprocates around the horizontal axis. It is named for its antique pirate ship. Mostly used in amusement parks for tourists to play.

Today we will build a "pirate ship" that uses the principle of belt drive.

Teaching New Knowledge



Teaching New Knowledge

Advantages and disadvantages of belt drive

(1) Advantages: smooth transmission, buffer absorption, simple structure, low cost, convenient use and maintenance, good flexibility and flexibility, and overload and slip.

(2) Disadvantages: Inaccurate transmission ratio, low belt life, large load on the shaft, large external dimensions of the transmission, and low efficiency.



Teaching New Knowledge

The use of belt drive

Belt drive is divided into flat belt drive, V-belt drive, timing belt and so on. It is widely used in industry, home appliances, agriculture, and automotive.

For example, there are pressing machines, rice milling machines, washing machines, assembly conveyor belts, primary transmissions for CNC lathes, and accessories for transmissions such as automobile engine timing systems and generators.







Task Practice



Task Practice

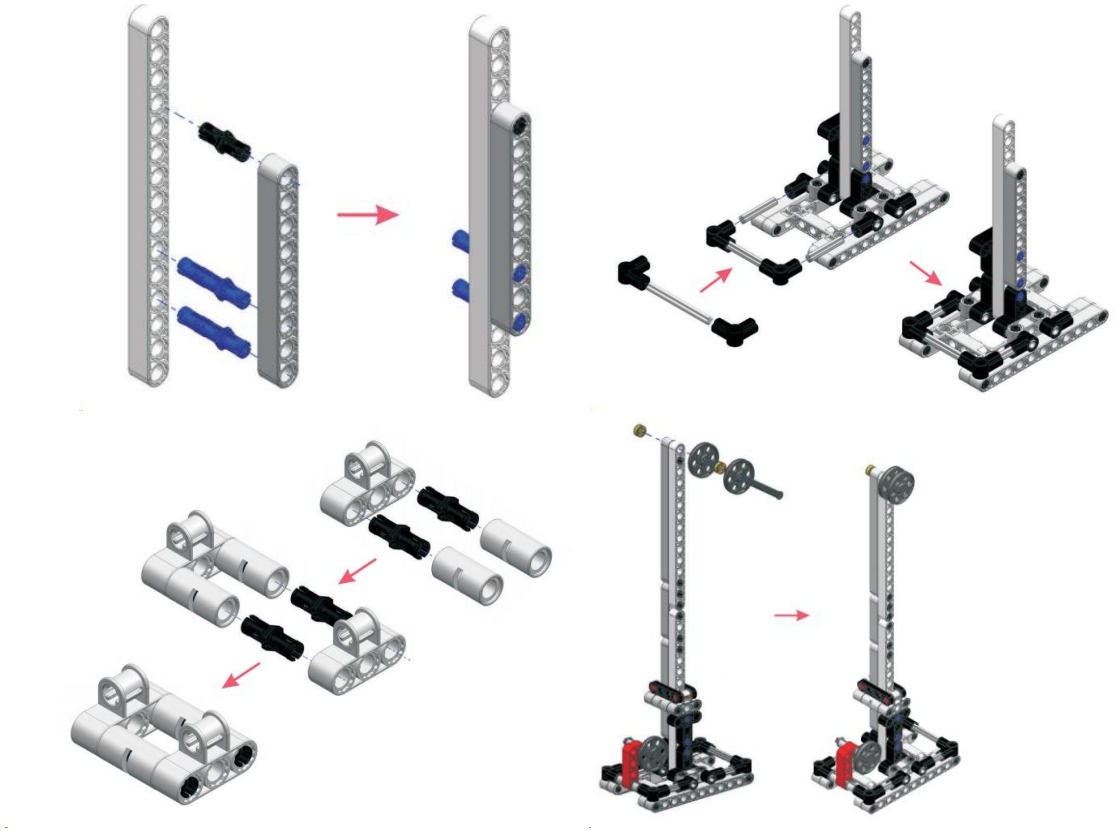

Assembly requirements

①stable structure

②focus is right

③shape match

Checking Effect



Test Effect



Reviewing the learning content and deepen the impression.

Question 1 What is the name of the robot made today?

Question 2 What are the advantages of belt drive?

Thank you!

BE STEM READY

