Learning Series
Darts



This building-block programming kit introduces robotics and sensors.

The kit is equipped with various sensors such as sound sensitivity, color sensor, touch sensor, photoelectric sensor, color light, ultrasonic, camera and many building blocks parts. Students can build various building block robots with their imagination, and use graphical programming software to program the robot and experience the joy of hands-on creation.

Learning Target

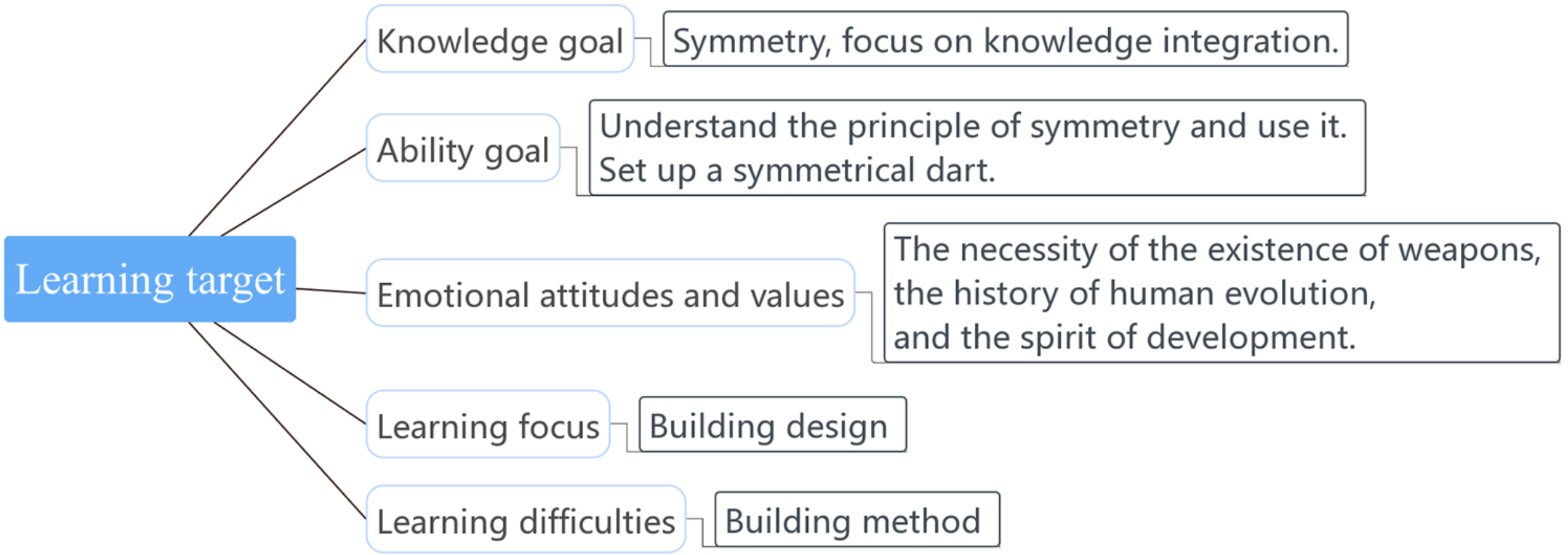

Contents

1 Course introduction

2 Teaching new knowledge

3 Task practice

4 Test effect

Course Introduction



What do you think of darts?
What principle is it used?

The dart is a centrally symmetrical mechanical structure that can be used for short-range self-defense. After the dart is thrown out, it will rotate around its geometric center in the air, so the trajectory is stable, and a certain precision can be guaranteed at a close distance to hit the target.

Course Introduction

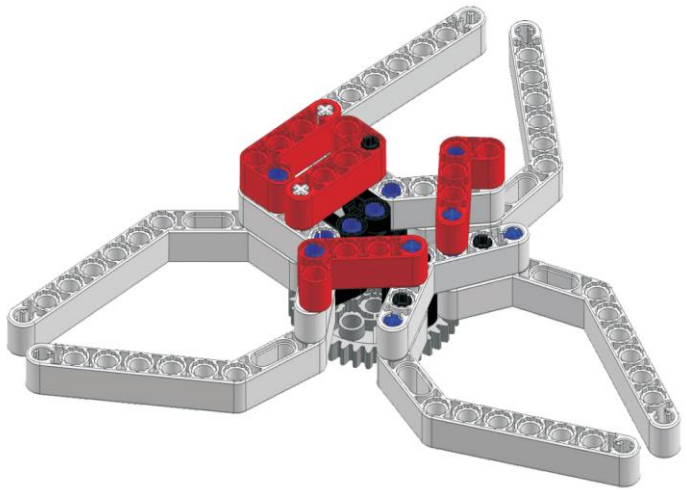

Darts

Know about the Darts

In the ancient Chinese self-defense application, the emergence of Chinese darts is roughly divided into three types.A willow-shaped willow-shaped dart, his technique is roughly the same as that of a flying knife. It has a 90-degree direct flight, a 180-degree spiral flight, and a 360-degree spiral flight.The other is that darts with tassels in the back are also commonly known as ear darts.There is also a picture called a meteor dart.

According to the knowledge and guidance of the teacher, the design and assembly of the "dart" is completed.

Teaching New Knowledge



Teaching New Knowledge

Darts

type: willow dart / ear dart / meteor dart

structure: center position - dart blade

function: It can rotate from the center.
It cannot be used as a weapon to injure people.



Teaching New Knowledge

Equipment matching: (Set the idea as a meteor dart)

1. Center: gears can be used as the center of the darts.

2. Dart blade: because the blade has a sharp edge and a blade, it needs to have a certain angle to express, so you need to use the angular beam.



Task Practice



Task Practice

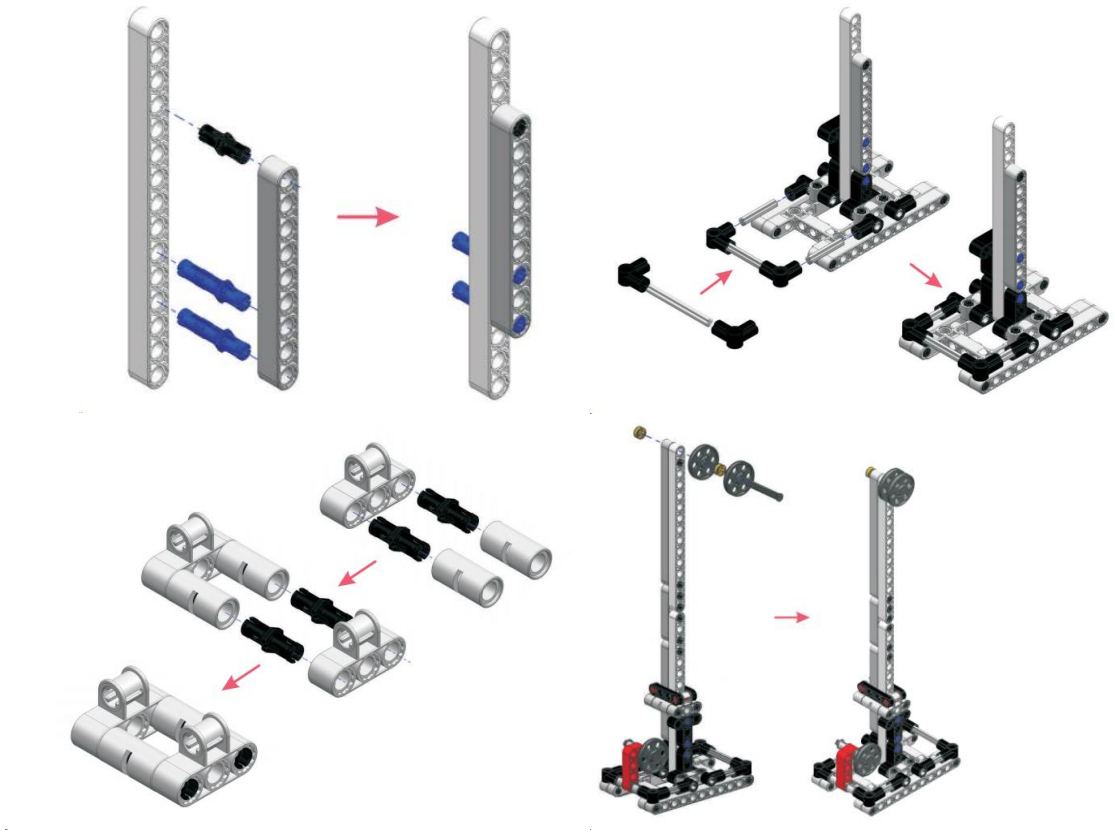

Assembly requirements

①Stable structure

②Proper gravity

③Shape match

Checking Effect



Test Effect



Question 1 What is the name of robot made today?

Question 2 Do you still remember what principle is it used?

Reviewing the learning content and deepen the impression.

Test Effect



Homework

1. Demonstrate presentations based on your own work, such as the name of the work, the source of inspiration.
2. Understand the characteristics and types of other weapons.

Thank you for watching

BE STEM READY

