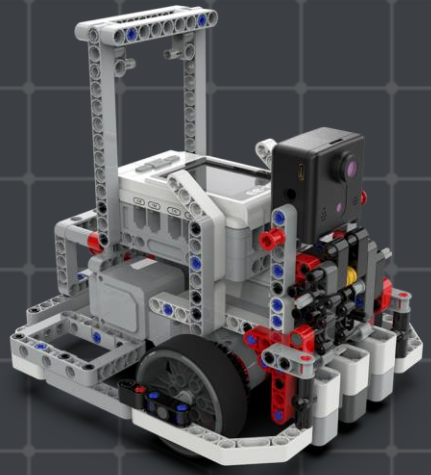

Lesson 31 | Dancing Robot |

Key points from this lesson:

1. Learn about the function of displaying pictures on the screen

2. Learn to write a simple program to display pictures on the screen

Possible difficulties from this lesson:

1. Be familiar with the method and naming rules for placing image files

Dance

Dance is a performing art form that uses rhythmic movements as its main means of expression. It requires the use of the body to complete various graceful or difficult movements, usually with musical accompaniment and can be performed by one person or more than one person.



Dancing Robot

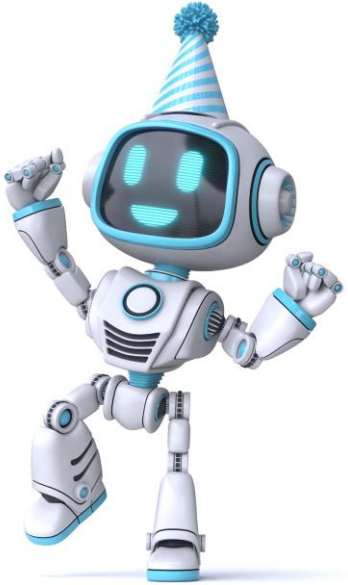

Dancing robots can dance to the rhythm of music. They don't get tired like humans do, and can dance all day long as they have electricity. They are mainly used in opening ceremonies, event warm-ups, children's entertainment, resident performances, etc. They can attract people around to stop and watch, making the event more interesting and interactive.

Project Tasks

Design a dancing robot model and control it with the ultrasonic sensor.

Requirements for robot functions:

1. When a person approaches the robot, the robot will play music and dance for a while before stopping.

2. After the person leaves, the dance action can be triggered only when the person approaches the robot again.

3. The screen displays the background image when dancing, otherwise it does not display.

Effect Demonstration

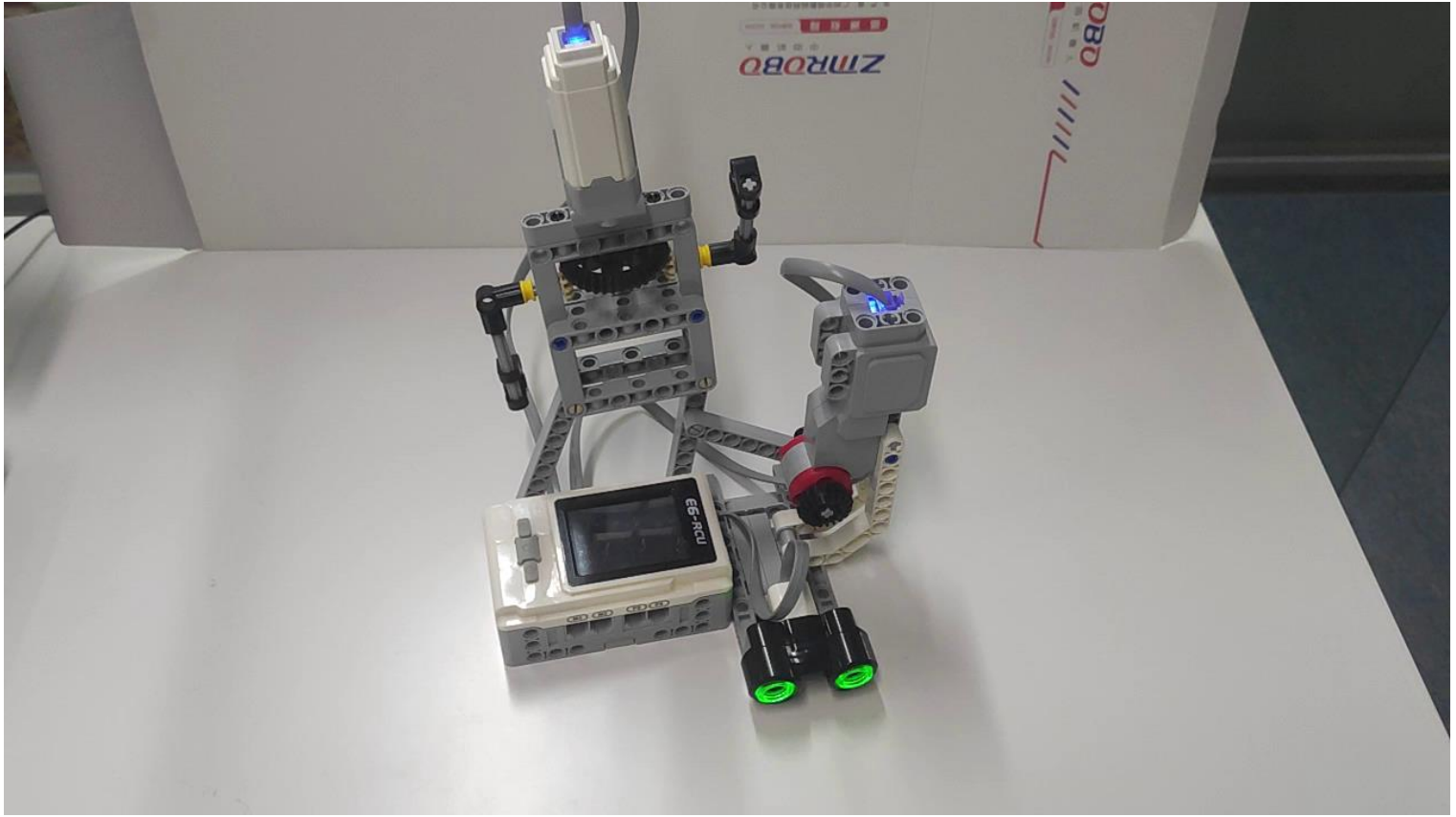

Build a robot

1

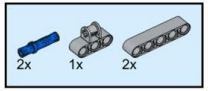

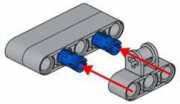

2

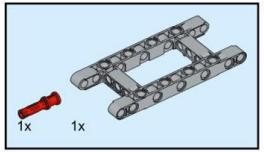

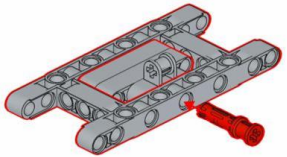

Build a robot

3

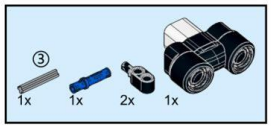

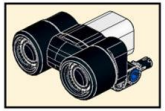

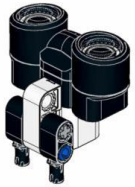

4

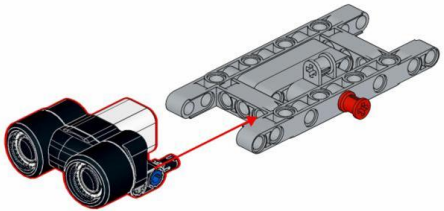

Build the components of the ultrasonic sensor

Build a robot

5

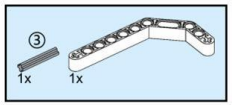

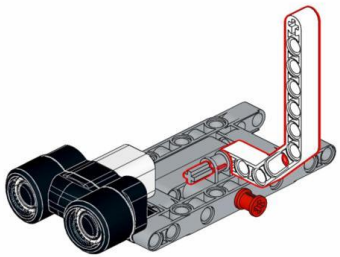

6

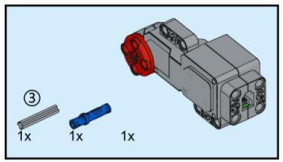

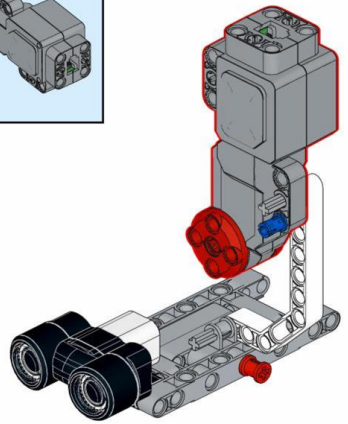

Build a robot

7

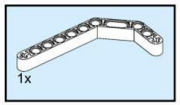

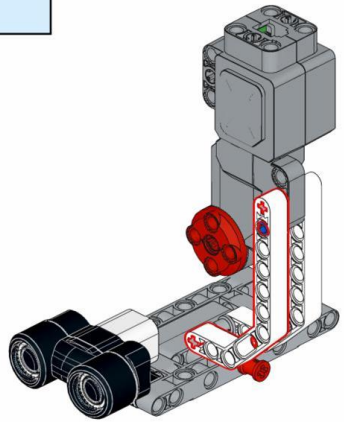

8

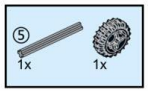

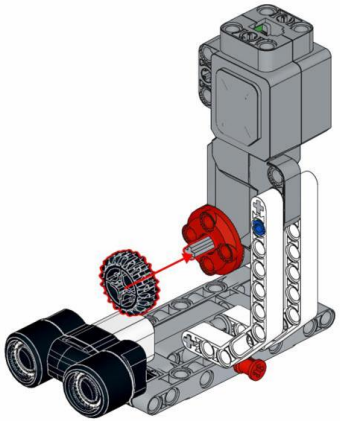

Build a robot

9

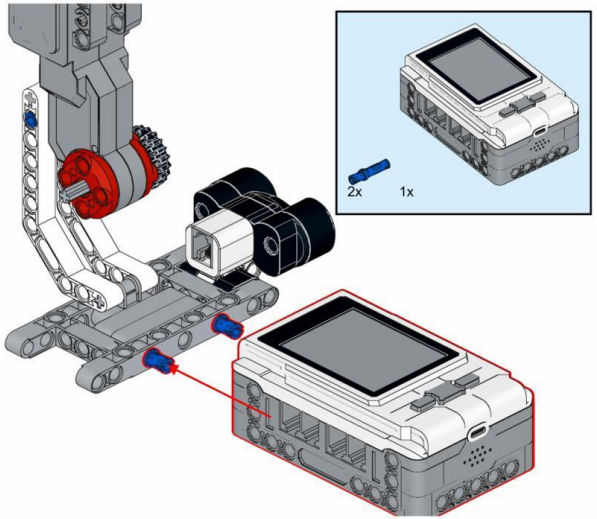

10

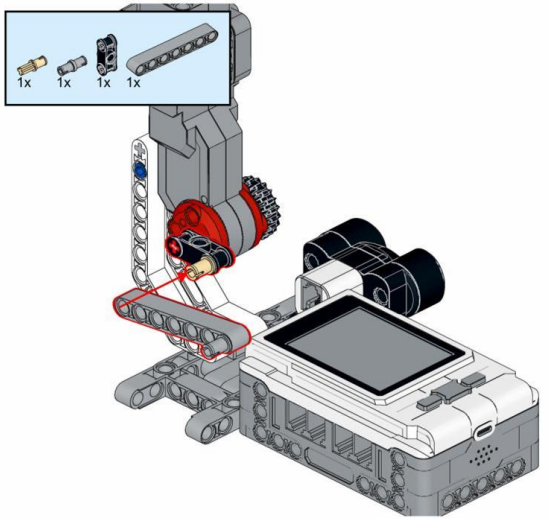

Build a robot

11

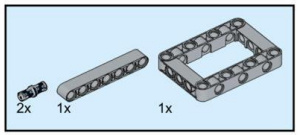

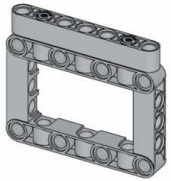



12

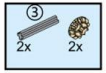

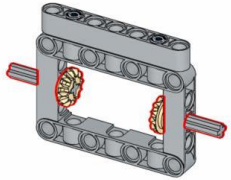

Build a robot

13

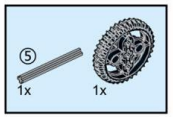

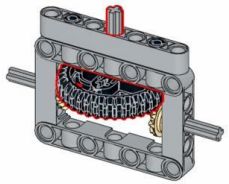

14

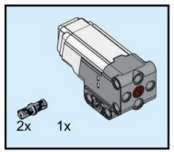

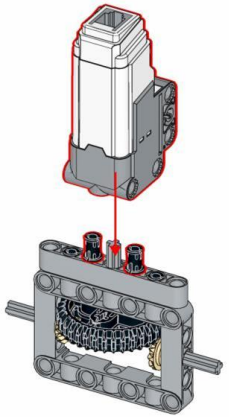

Build a robot

15



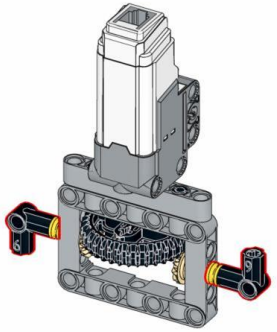

16

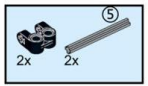

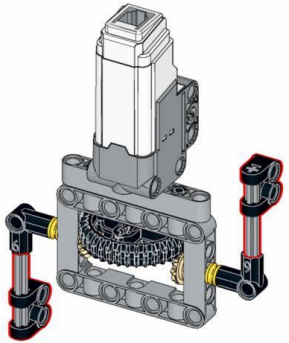

Build the hand structure

Build a robot

17

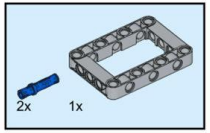

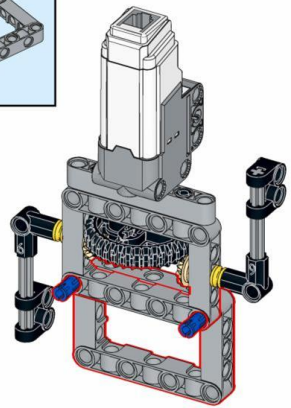

18

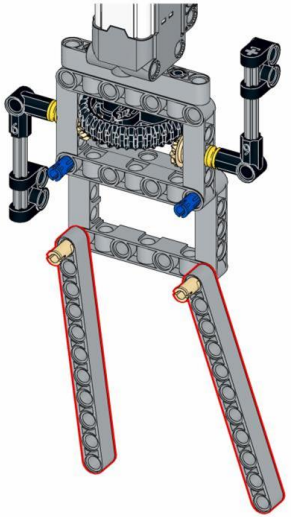

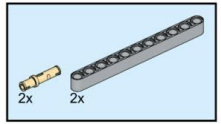

Build the leg structure

Build a robot

19

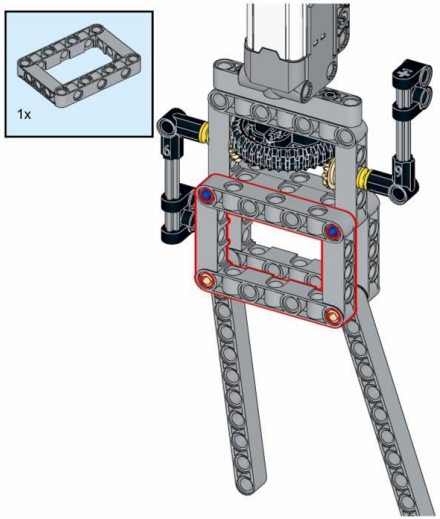

20

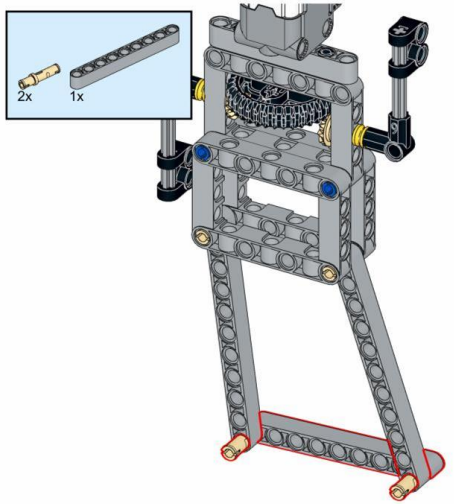

Build a robot

21

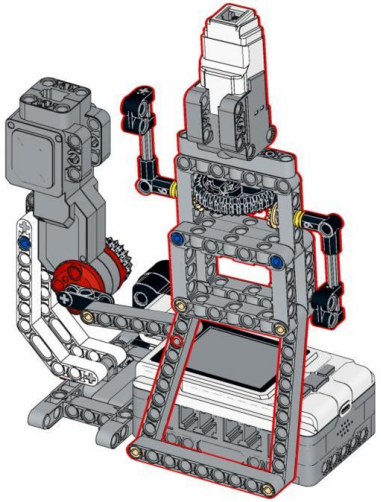

22

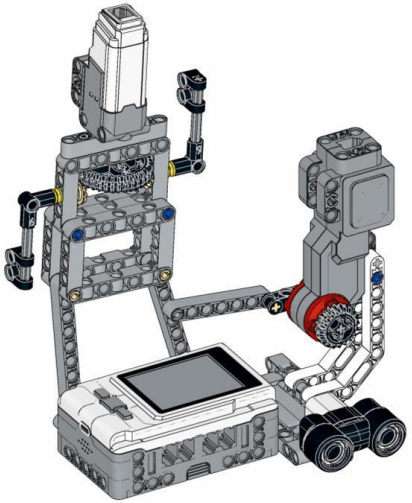

Hardware Connection

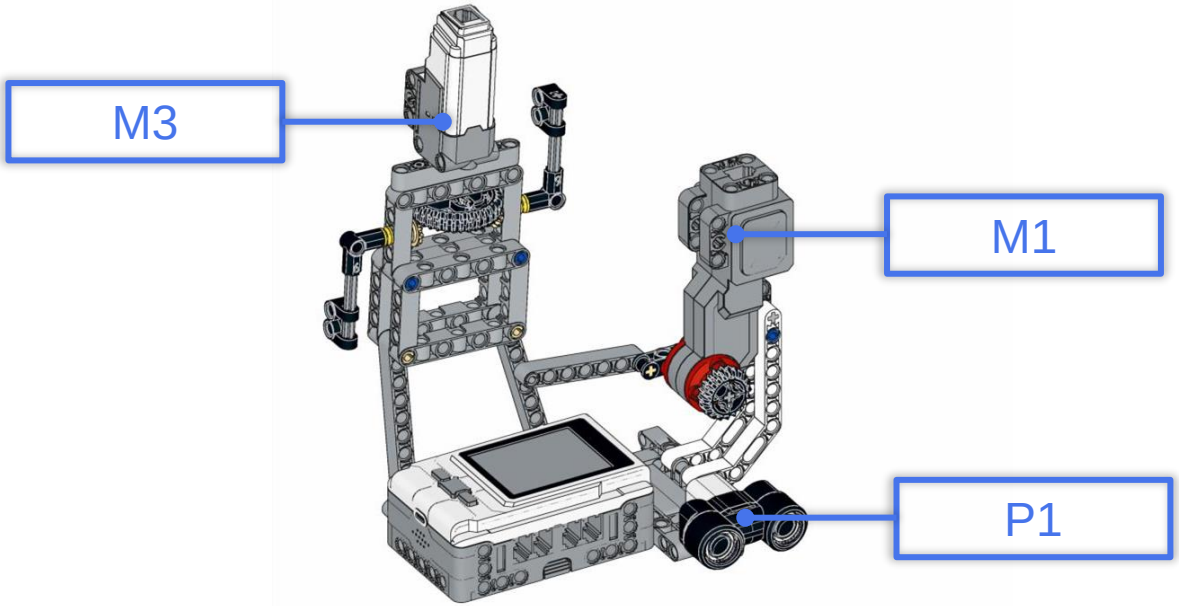

“

How do we achieve the required functions?

”

Store image files in the controller

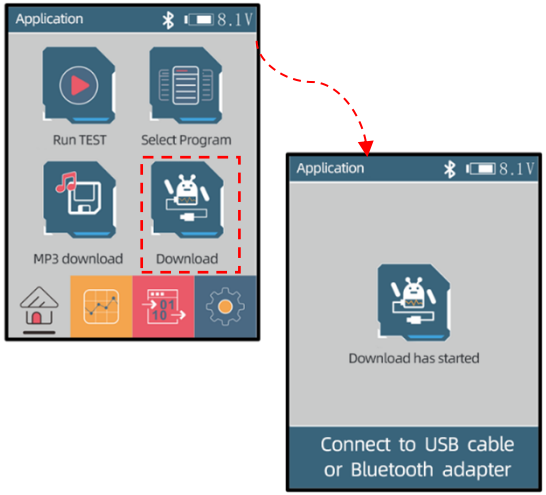

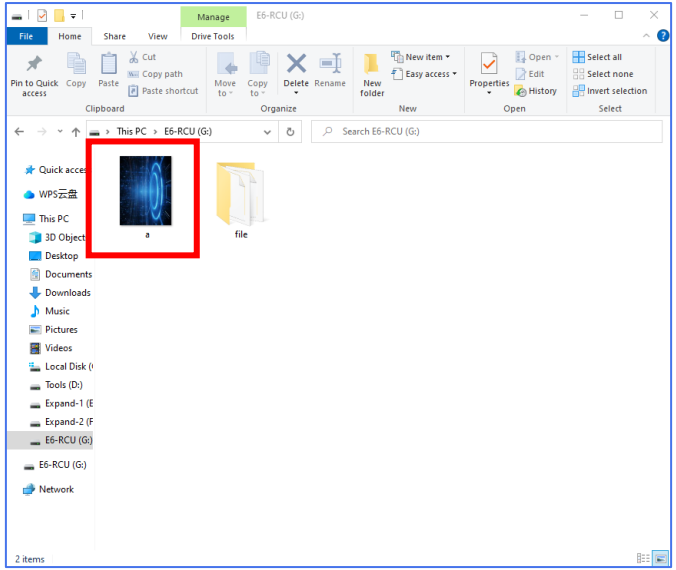

1. Connect to the controller

After clicking "Download" on the controller's main interface, connect it to the computer with a data cable. At this time, a disk will pop up on the computer, which includes the previously downloaded program file.

2. Place the image file

Put the image file in jpg format into the disk and change its name to English. Note: Supports display of standard lossy compressed JPEG images and lossless 16-bit/24-bit/32-bit true color BMP images. The recommended ratio is 4:3.

Coding block - show image

This module can display images at the coordinate position set on the display screen, with the starting position being the upper left corner of the image.



X coordinate, ranging from 0~239

Y coordinate, ranging from 0~319

Image file name, the image should be pre-stored in the disk controller

The value range is: 0~3, 0 means no scaling, 1 means scaling by 1/2, 2 means scaling by 1/4, and 3 means scaling by 1/8

Coding block - clear screen

This module can clear all display contents on the display screen and set the background color to yellow.

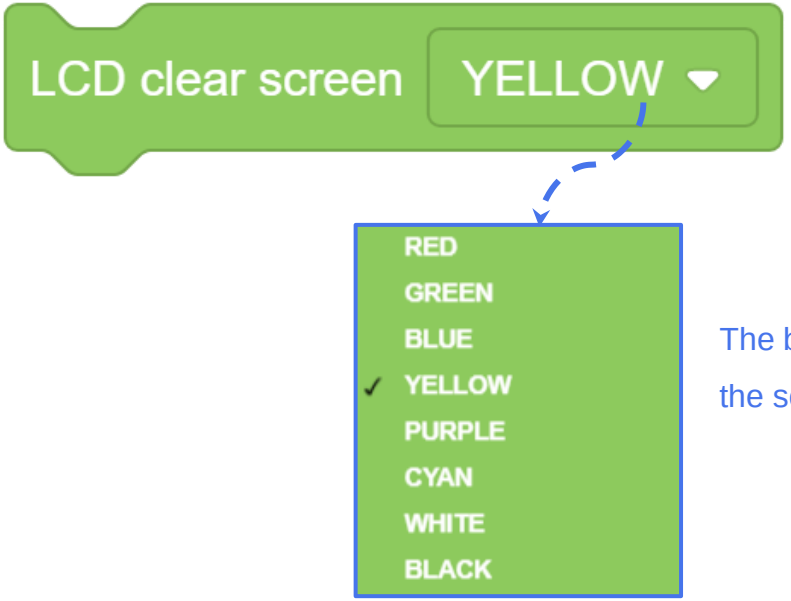

The background color after clearing the screen

Display the image repeatedly and clear the image

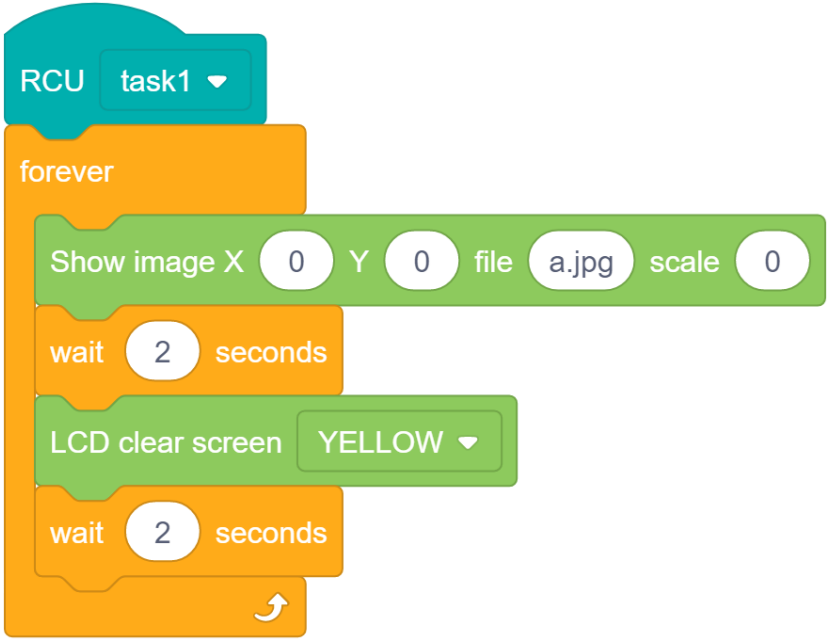

Let the robot repeatedly act as "displaying the picture for 2 seconds, then clearing the screen for 2 seconds".

Run the program and run the test



1. Come close and start dancing

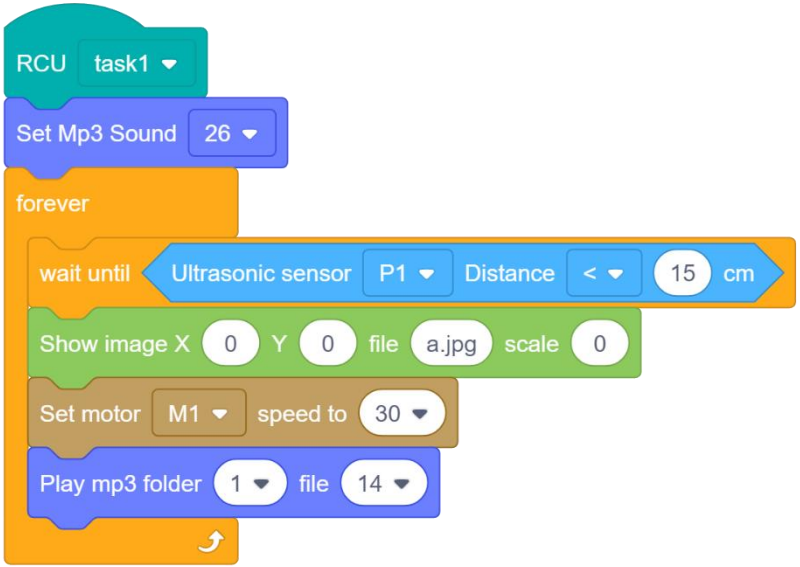

After the volume is initially set, the ultrasonic sensor will detect that the distance is less than the specified value, then the picture will be displayed, and the motor connected to the leg will rotate and play music.

2. Swing robot's arms for a while

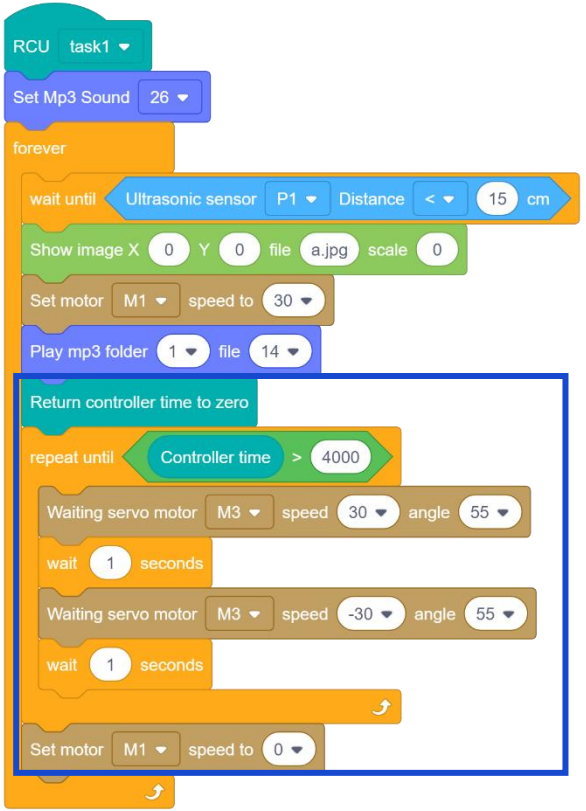

After the controller time is reset to zero, the hand motor is rotated back and forth for a period of time, and then the leg motor is stopped.

3. Wait after clearing the screen

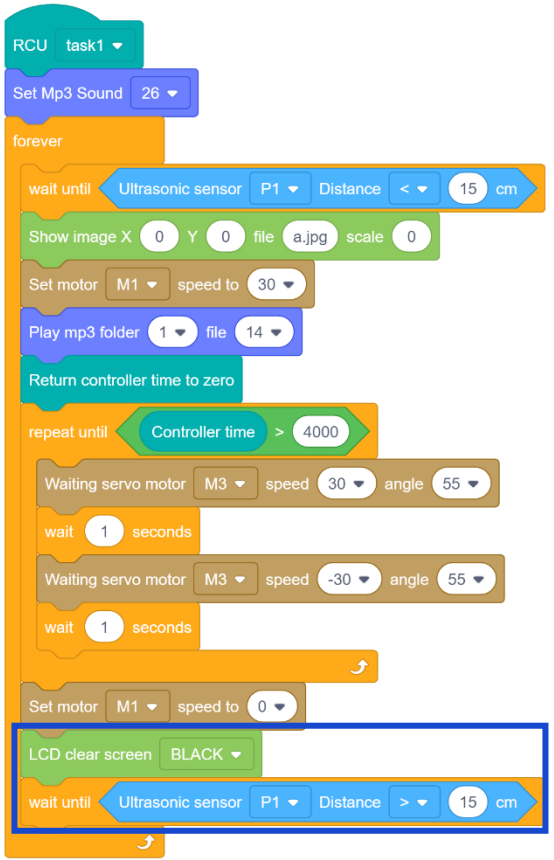

After clearing the screen, the background is displayed in black, waiting until the ultrasonic sensor detects a distance greater than the specified value.

Expansion Tasks

Let two pictures switch on the display screen



Expansion Program

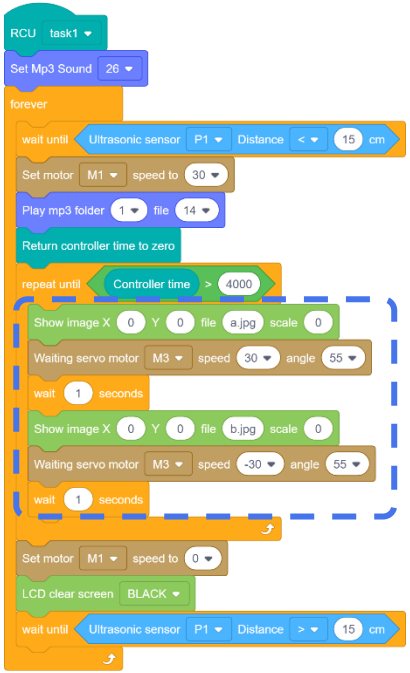

Switch the images repeatedly as the robot's arm swings.

Quiz

Single-choice question

Which of the following statements about displaying pictures on the screen is wrong? ( )

A. The size of the displayed picture can be set

B. If the picture size is too large, it may exceed the screen range

C. The picture file needs to be placed in the program disk in advance

D. There is no limit on the format of the picture file

Answer: D

Further Reading



Dancing robots can be traced back to ancient automatic machines and puppets that could perform to music. However, the development of modern dancing robots began in the 1980s. At that time, artificial intelligence technology had just emerged and robotics technology was just starting. In Japan, the ASIMO robot began to appear and was welcomed in various exhibitions and performances. ASIMO is a humanoid robot that can autonomously identify sounds and images and move. It can jump, walk, run, and even greet and hug the audience, which also marks that robot dance has become a favorite entertainment method for people, especially teenagers.

Further Reading



Later, with the continuous development of artificial intelligence technology, dancing robots began to become more intelligent and flexible. In modern times, dancing robots have become an important branch of the field of artificial intelligence. They can not only perform various complex dance moves, but also perform various functions such as performance, interaction and entertainment. At the same time, countries such as China, the United States, and Japan are also constantly launching various new types of dancing robots and applying them in various fields.

ZMROBO
ROBOT

Thanks!