Learning Series
Spider



This building-block programming kit introduces robotics and sensors.

The kit is equipped with various sensors such as sound sensitivity, color sensor, touch sensor, photoelectric sensor, color light, ultrasonic, camera and many building blocks parts. Students can build various building block robots with their imagination, and use graphical programming software to program the robot and experience the joy of hands-on creation.

Learning Target

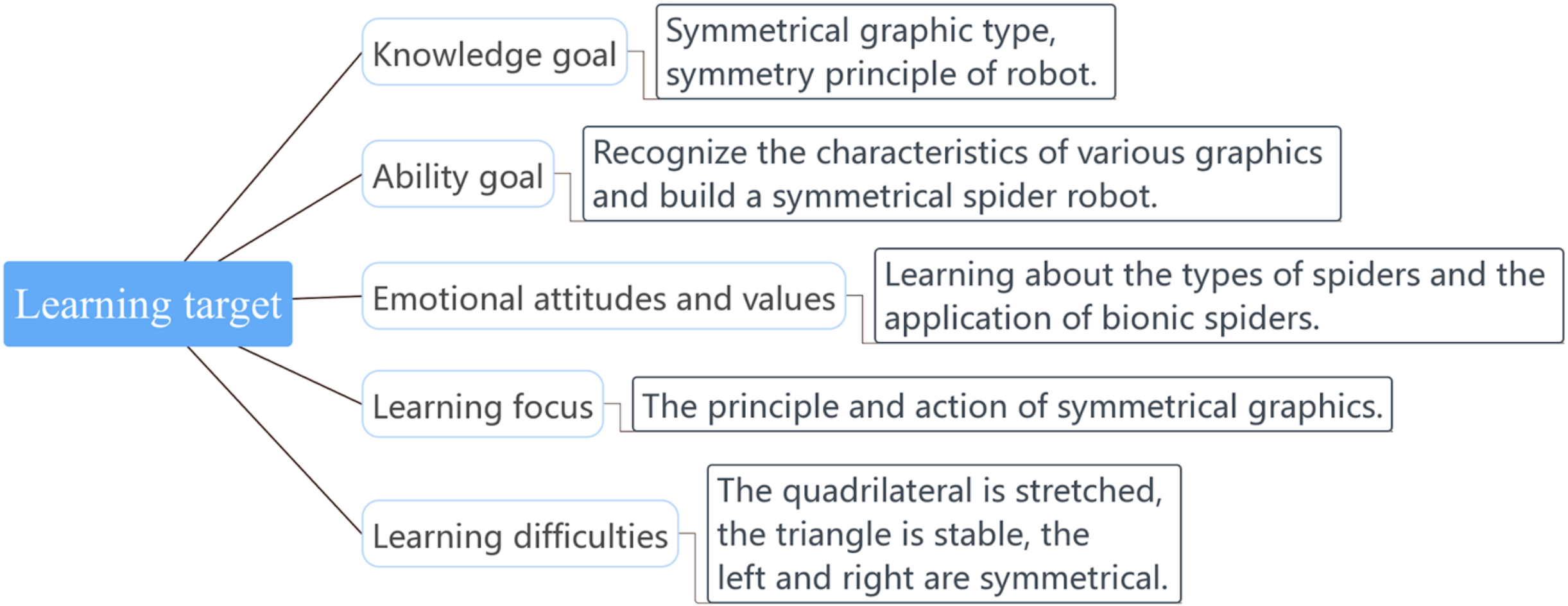

Contents

1 Course introduction

2 Teaching new knowledge

3 Task practice

4 Test effect

Course Introduction



Course Introduction



Let's look at a picture of a pyramid. What are the symmetrical graphics in the picture?

It is distributed in Egypt and the Americas, in Upper Egypt, Central Egypt and Lower Egypt in ancient Egypt, and now in Sudan and Egypt.

The current Nile River is dotted with about 80 pyramid relics. In front of the pyramid of King Harvard, there is also a sphinx symbolizing the power and dignity of the king.

The Egyptian pyramid is the tomb of the emperor (Pharaoh) of ancient Egypt. One of the Seven Wonders of the World.

Course Introduction

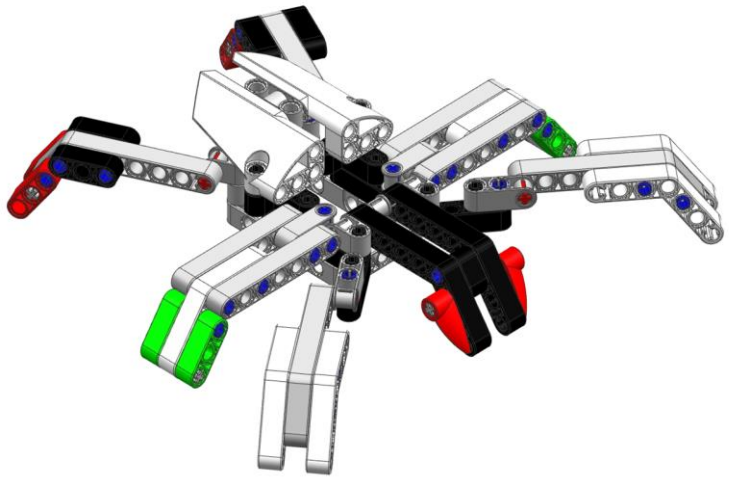

Spider Robot

Know about the Spider Robot

Left and right symmetry is the basis of symmetrical graphics, learning spider robots.Learning according to the principle of left and right symmetry, and enhance the understanding of symmetrical graphics.

This lesson will build a "spider robot" , whose name called spider robot. There are three legs both on the left and right sides, and it is a bilaterally symmetrical robot.

Teaching New Knowledge



Teaching New knowledge

Axisymmetric graphics

In the plane, a figure is folded along a straight line, and the parts on both sides of the line can completely coincide with the figure.

The line is called the axis of symmetry. At this time, we also say that this figure is symmetrical about this line.

Such as circles, squares, isosceles triangles, equilateral triangles, isosceles trapezoids, etc.

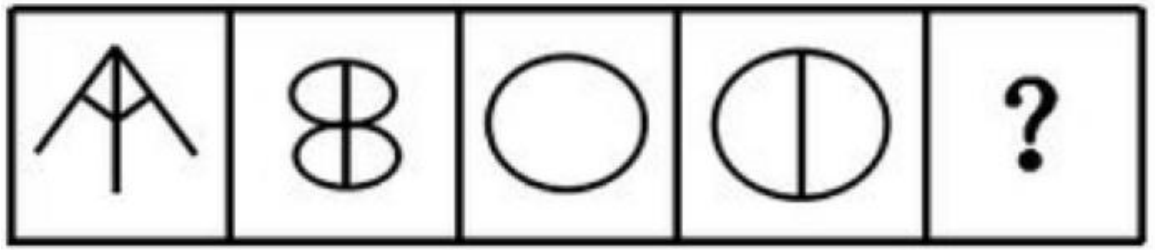

Teaching New knowledge

Symmetrical graphics in life

1. Construction

2. Paper cutting

3. the bridge



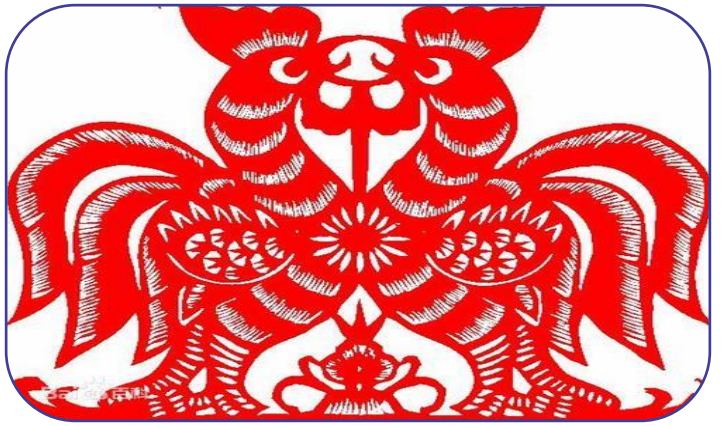



Task Practice



Task Practice

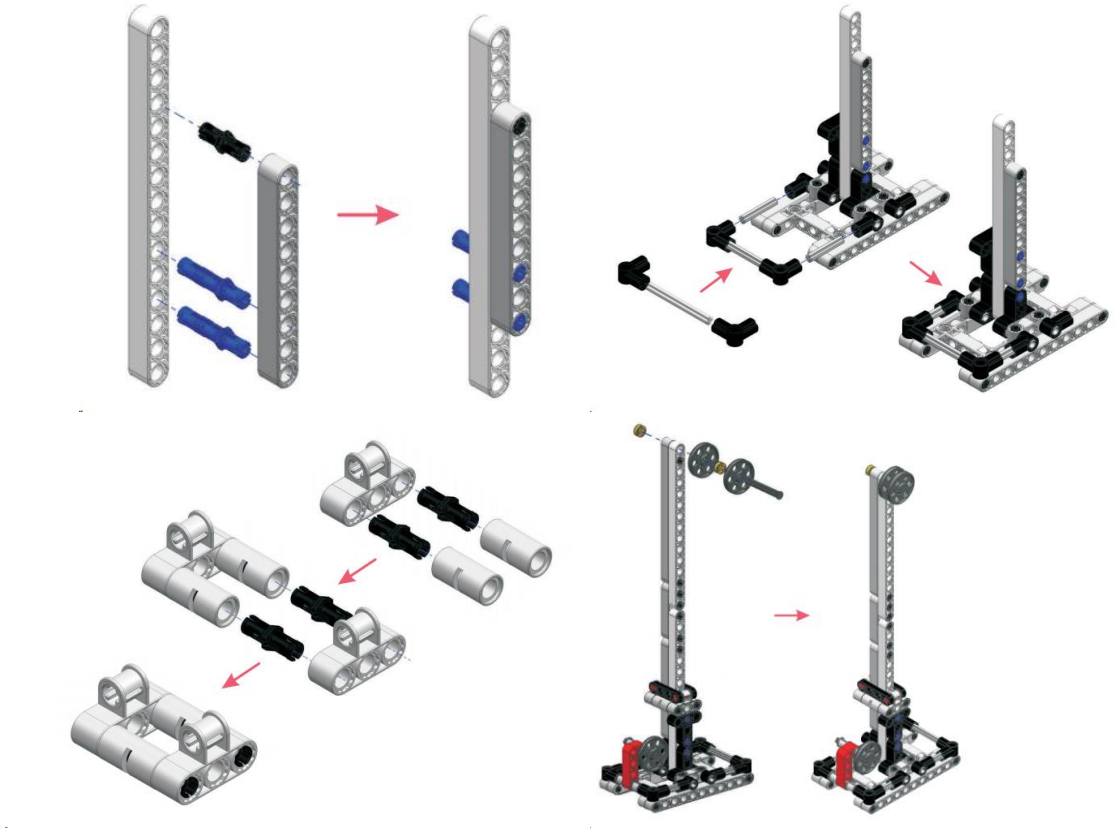

Assembly requirements

①Stable structure

② Proper gravity

③Shape match

Checking Effect



Test Effect



Question 1

What is the name of the robot today?

Question 2

What graphics principle is it used?

Reviewing the learning content and deepen the impression.

Test Effect



Homework

1.Observe the source of the spider's walking way.

2.Learning the type of spiders.

Thank you for watching

BE STEM READY

