Learning Series
Bird Robot



This building-block programming kit introduces robotics and sensors.

The kit is equipped with various sensors such as sound sensitivity, color sensor, touch sensor, photoelectric sensor, color light, ultrasonic, camera and many building blocks parts. Students can build various building block robots with their imagination, and use graphical programming software to program the robot and experience the joy of hands-on creation.

Learning Target

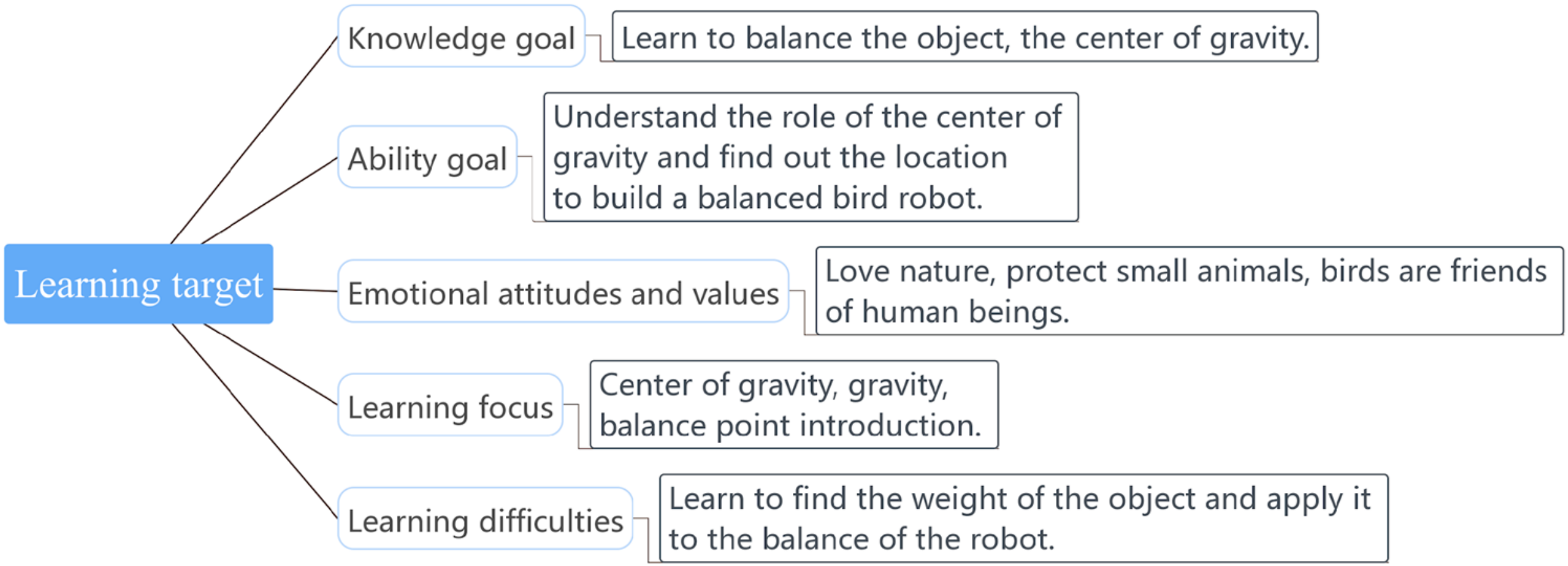

Contents

1 Course introduction

2 Teaching new knowledge

3 Task practice

4 Test effect

Course Introduction



Course Introduction



Observe the balance bird,
why the balance bird do not fall with one fulcrum?

Balanced bird is a toy that uses a bird's mouth to rest on a finger. No matter where the bird is placed (where it can be placed or on the finger), it can be balanced and not dropped. Flying like a real bird.

Course Introduction



Bird Robot

Know about the Bird Robot

Bird Robot, which is built according to the principle of left and right symmetry of the figure, keeps the two sides balanced.

Today we build a balanced bird robot, which applies the symmetry principle learning of the previous lesson, and the balance principle learning of this lesson, let us build it and find out its focus.

Teaching New Knowledge



Teaching new knowledge

Balance: the center of gravity of the object falls within the support surface or fulcrum of the object so that it can be balanced.

And the lower the center of gravity, the higher the stability of the object balance.

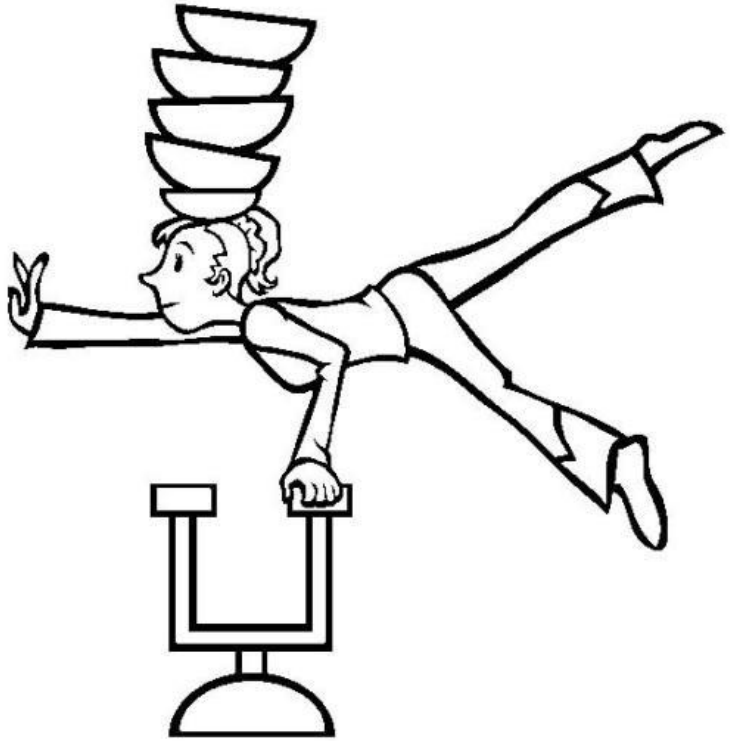

Teaching new knowledge

Balance: The center of gravity of the object falls within the support surface or fulcrum of the object so that it can be balanced. And the lower the center of gravity, the higher the stability of the object balance.

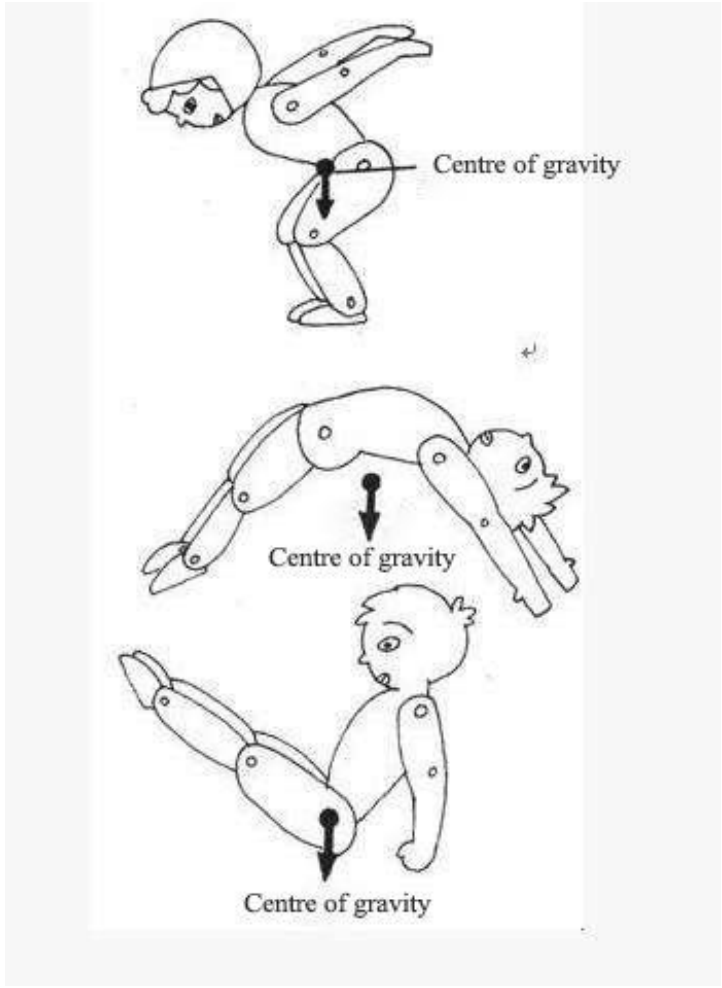

Teaching new knowledge

Application of balance and center of gravity in life



Tumble

r



Walking the Wire



Dancing

Task Practice



Task Practice

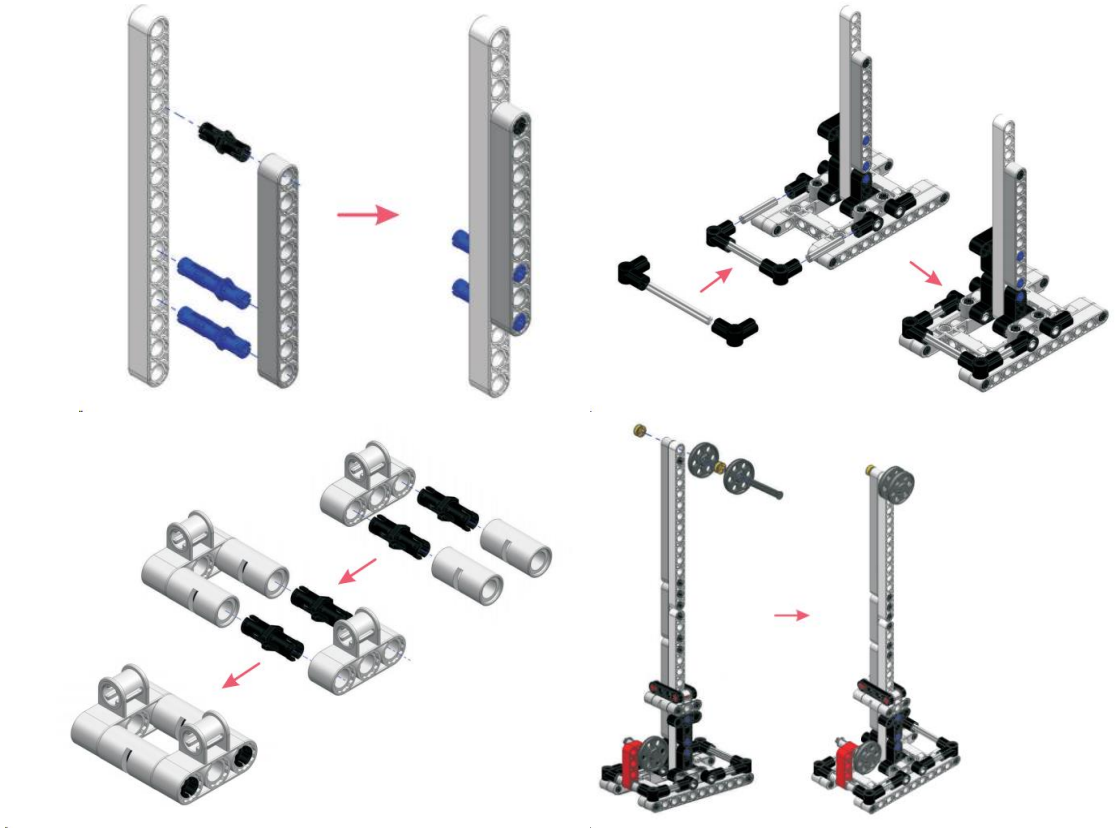

Assembly requirements

①Stable structure

②Proper gravity

③Shape match

Checking Effect



Test Effect



Question 1

What is the name of robot made today?

Question 2

Where is the center of gravity of the balance bird?

Reviewing the learning content and deepen the impression.

Test Effect



Homework

1. Observe the application of the center of gravity and balance in life.

2. Show a example of where is the center of gravity of any object, and explain it.

Thank you for watching

BE STEM READY

