Learning Series

Jumping Machine



This robotics kit is a building block programming robot research and development by Joinmax.

The kit is equipped with various sensors such as sound sensitivity, color sensor, touch sensor, photoelectric sensor, color light, ultrasonic, camera and many building blocks parts. Students can build various building block robots with their imagination, and use graphical programming software to program the robot and experience the joy of hands-on creation.

Learning Target

01

Knowledge goal

Know what a pulley is and understand the purpose of the pulley.

02

Ability goal

A simple analysis of the structure and the use of equipment to complete the corresponding case.

03

Emotional attitudes and values

Contrast learning, begin the analysis process under the guidance of the teacher.

Learning Target

01

Learning focus

Reasonable use of the pulley in the mechanism to change the direction and effort of the force.

02

Learning difficulties

Force analysis of the pulley block.

Contents

01 Course Introduction

02 Teaching New Knowledge

03 Task Practice

04 Test Effect

Course Introduction



Course Introduction

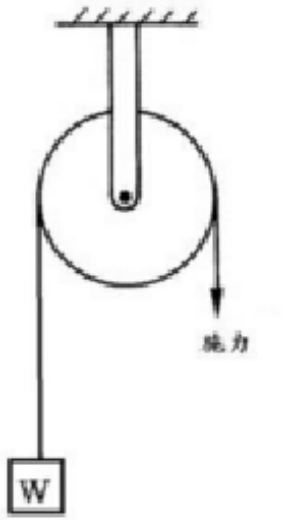

What mechanical device is used in the picture above?

When using mechanical work, the speed and torque required by the working part of the machine are sometimes inconsistent with the power machine; some machine working parts often need to change the speed; the output shaft of the power machine is generally only for the rotary motion, and the working part of the machine needs Other forms of motion, such as linear motion, spiral motion or intermittent motion, have different devices to solve similar problems.

Course Introduction

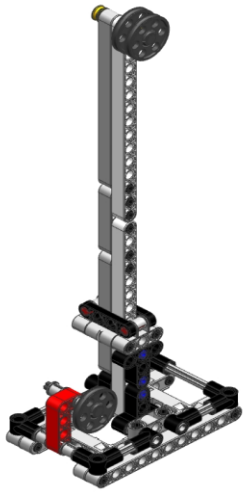

jumping machine

Know the jumping machine

The jumping machine is a kind of stimulating entertainment facility that is very common in the playground. It allows the entertainer to rise from the ground to the height, and then freely fall from the height to move a part of the distance, and finally return to the ground safely.

Because we can't put a big engine at the top (because it's inconvenient and difficult to maintain), similar devices have the need to apply a direction of force and direction of motion. Let's take a look at how the pulley works.

Teaching New Knowledge



Teaching New Knowledge

Pulley: In mechanics, a typical pulley is a circular wheel that can be rotated about a central axis.There is a groove on the circumferential surface of the round wheel, the rope is wound around the groove, and either end of the rope is pulled hard, and the friction between the rope and the round wheel causes the round wheel to rotate around the central axis.

Use of the pulley: The main function of the pulley is to pull the load, change the direction of the applied force, transmit the power, and so on.

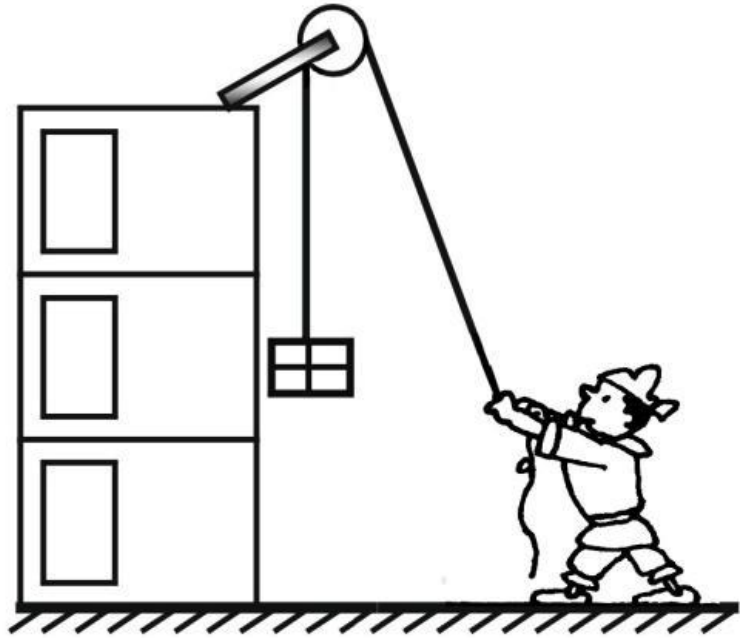

Teaching New Knowledge

Fixed pulley: When the pulley is used, the pulley whose position of the shaft is fixed is called a fixed pulley.

The characteristics of the fixed pulley: the fixed pulley is not labor-saving, but can change the direction of the force.

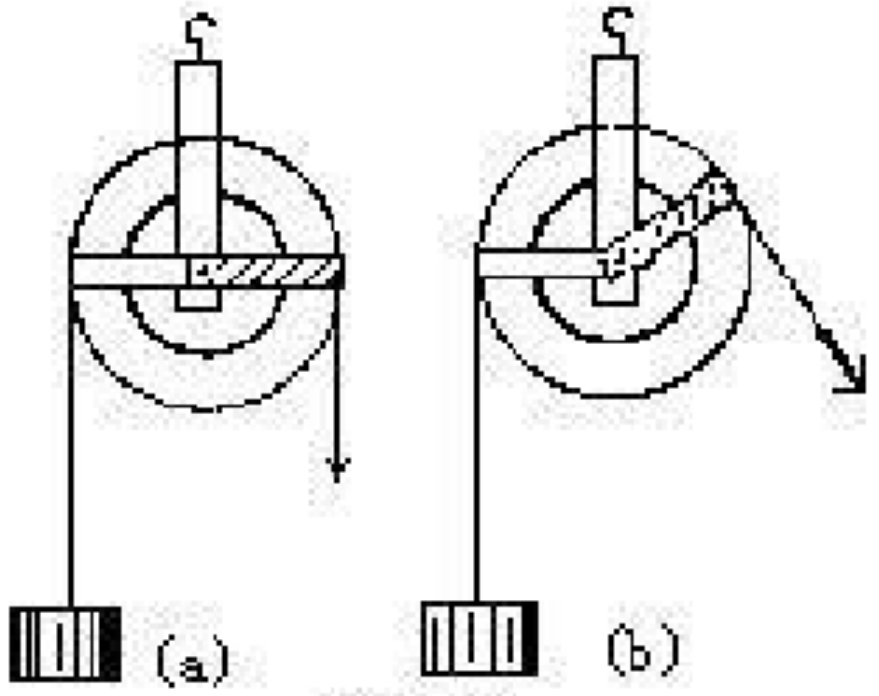

Teaching New Knowledge

Force analysis of fixed pulley:

the power arm is equal to the equal arm lever of the resistance arm

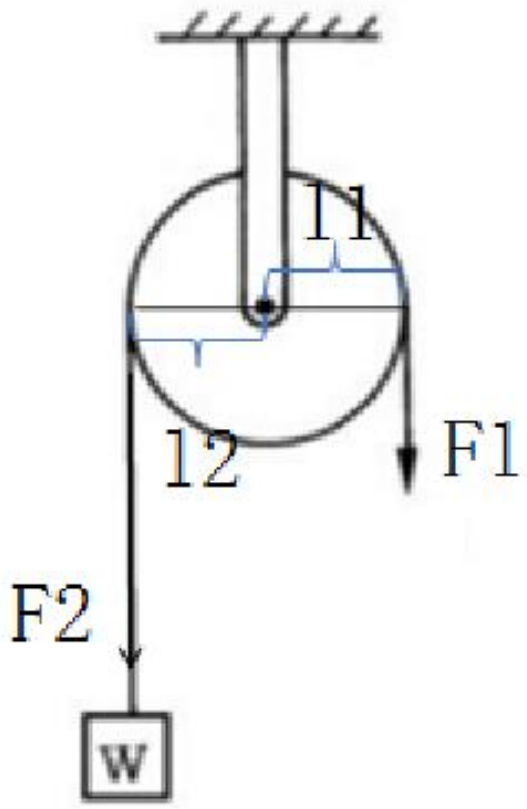

Task Practice



Task Practice

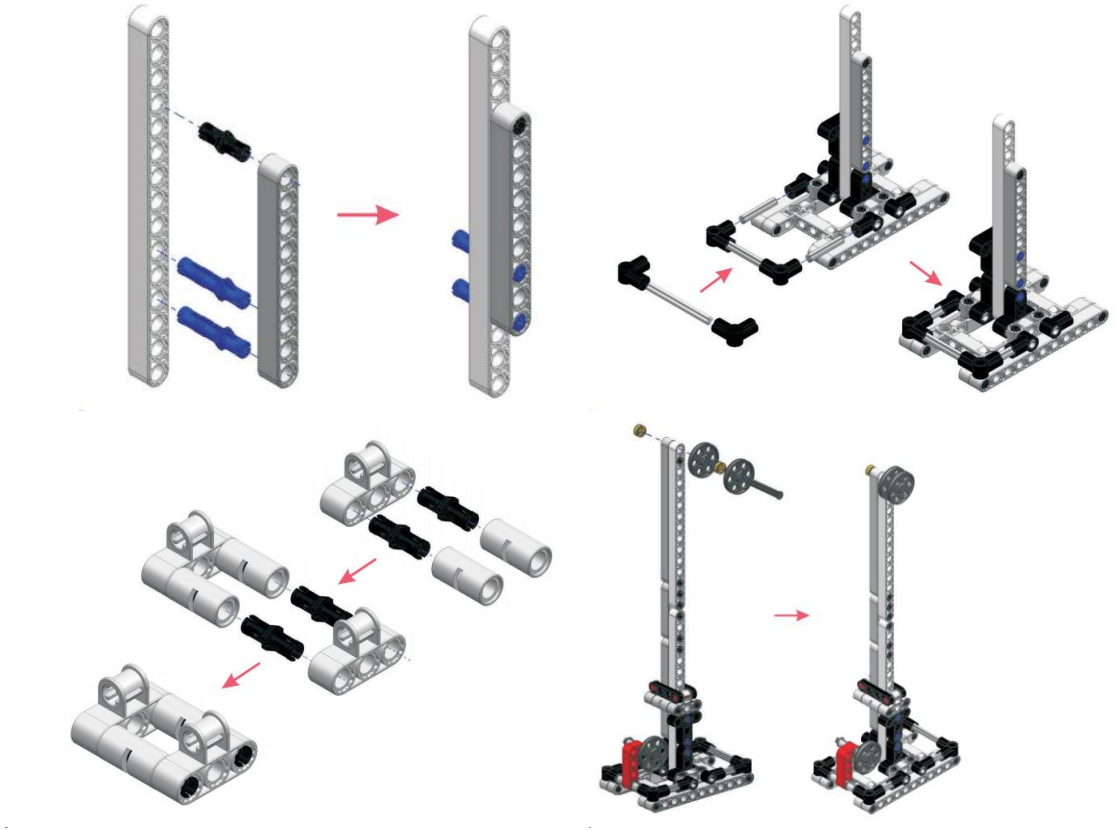

Assembly requirements

①stable structure

②focus is right

③shape match

Checking Effect



Test Effect



Reviewing the learning content and deepen the impression.

Question 1 What is the name of the robot made today?

Question 2 What structure does the robot use today?

Question 3 What type of lever is the pulley?

Thank you!

BE STEM READY

