Learning Series

Sled



The robotics kit includes various sensors such as sound, color, touch, ultrasonic, camera, etc. Students can construct various robots with imagination, program their functions and experience the happiness of creation.

Learning Target

01

Knowledge goal

Force balance and friction

02

Ability goal

The balance of force and the importance of friction

03

Emotional attitudes and values:

Understanding the importance of life, respecting objective facts, and understanding the forces more clearly by recognizing different structures of force

Learning Target

01

Learning focus

Balance of force

02

Learning difficulties

Know Capricorn

01

Course Introduction

02

Teaching New Knowledge

03

Task Practice

04

Test Effect

Course Introduction



Course Introduction



Do you feel balanced when you sit in a chair? What is balance? What happens when the balance loses balance?



Why can people skate? Why is the sole of the skates made into a knife?

If necessary, we also need to reduce the ground force that is received, reach equilibrium and move faster.

Balance is critical to artificial intelligence and robotics, and we need to control the balance and balance of the robot.Otherwise, our robots are easily lost and destroyed.

Course Introduction

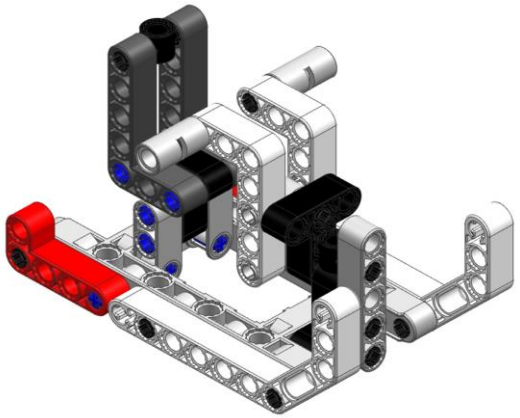

Sled

Meet the sleigh

The sled is a snow sports equipment that originated in Switzerland and is popular in Europe, North America and Asia.Originally made of wood, metal production later appeared.Later loaded into the electric car, a kind of fast and fast means of transportation

The Sled can walk well in the snow, it is not easy to fall into the snow, and it can control freely in the snow with less friction.

Teaching New Knowledge





Teaching New Knowledge

Balance of force: In the mechanical system, balance refers to the state in which the object is subjected to several forces in the inertial frame of reference, still in a stationary state, or in a state of uniform linear motion, or a state of constant rotation around the axis, called an object in equilibrium. Referred to as the "balance" of the object.



Teaching New Knowledge

Capricorn:

The force that hinders the relative motion of the object (or relative motion tendency) is called friction.

The direction of friction is opposite to the direction of relative motion (or relative motion) of the object.

The friction is divided into three types: static friction, rolling friction and sliding friction.



图 2

Task Practice



Task Practice

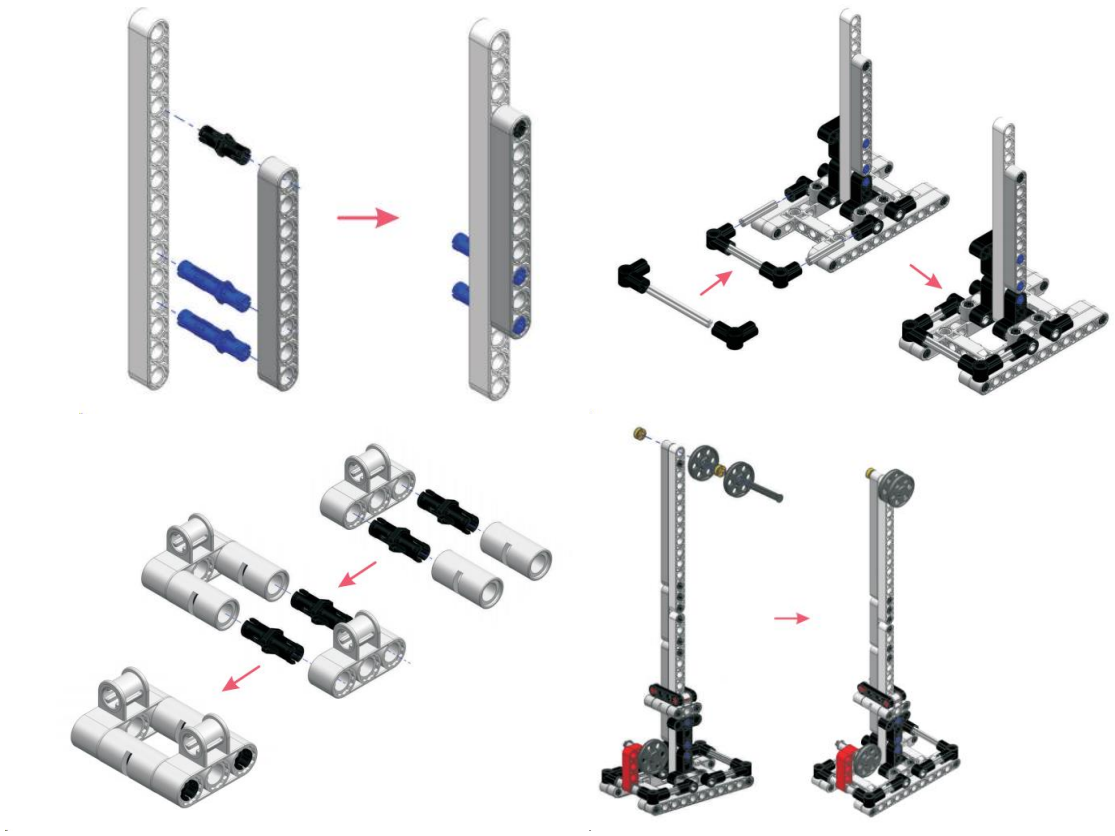

Assembly requirements

①stable structure

②focus is right

③shape match

Checking Effect



Test Effect



Review the learning content and deepen your impression.

Question 1

What is the name of the robot made today?

Question 2

What materials are used in today's robots?

Question 3

Can today's robots slide? How to increase the speed of taxiing?

Thank you for watching

BE STEM READY

