2. Probe Vehicle

Content

1 Theme Introduction

2 Learning Objectives

3 New knowledge

4 Design and Assemble

5 Programming

6 Course Extension

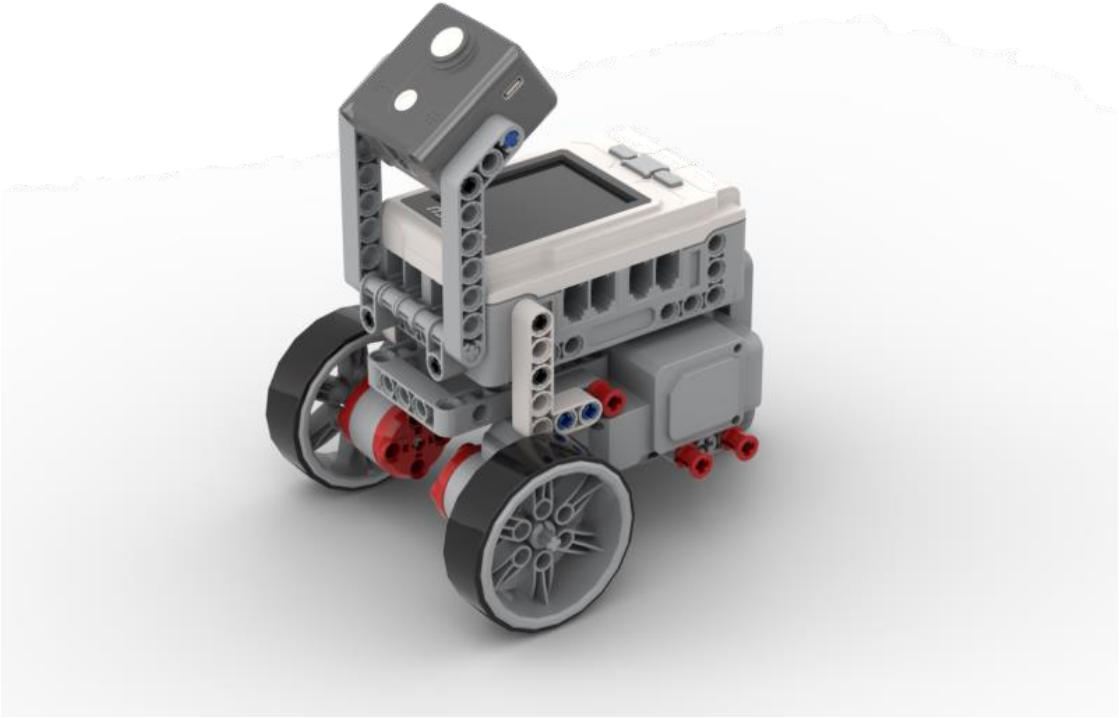

Theme Introduction



Earthquakes, tsunamis and other natural disasters seriously threaten the safety of human life and property. Studies have shown that the 72 hours after a disaster is a prime time to save lives, so rescue operations must be launched as soon as possible. That's where the Probe Vehicle comes in handy.

Theme Introduction



The Probe Vehicle uses its own camera to transmit the internal image of the ruins back to the background, so that rescuers can understand the internal conditions of the ruins at the first time and determine the rescue plan. There are various ways for the Probe Vehicle to indicate danger, including direct image prompts, and methods of using colors to indicate the level of danger. We can use the color recognition function to make a Probe Vehicle robot.

Learning Objectives

1. Understand the principle of color detection.

2. Learn to use the color detection mode of AI audiovisual module

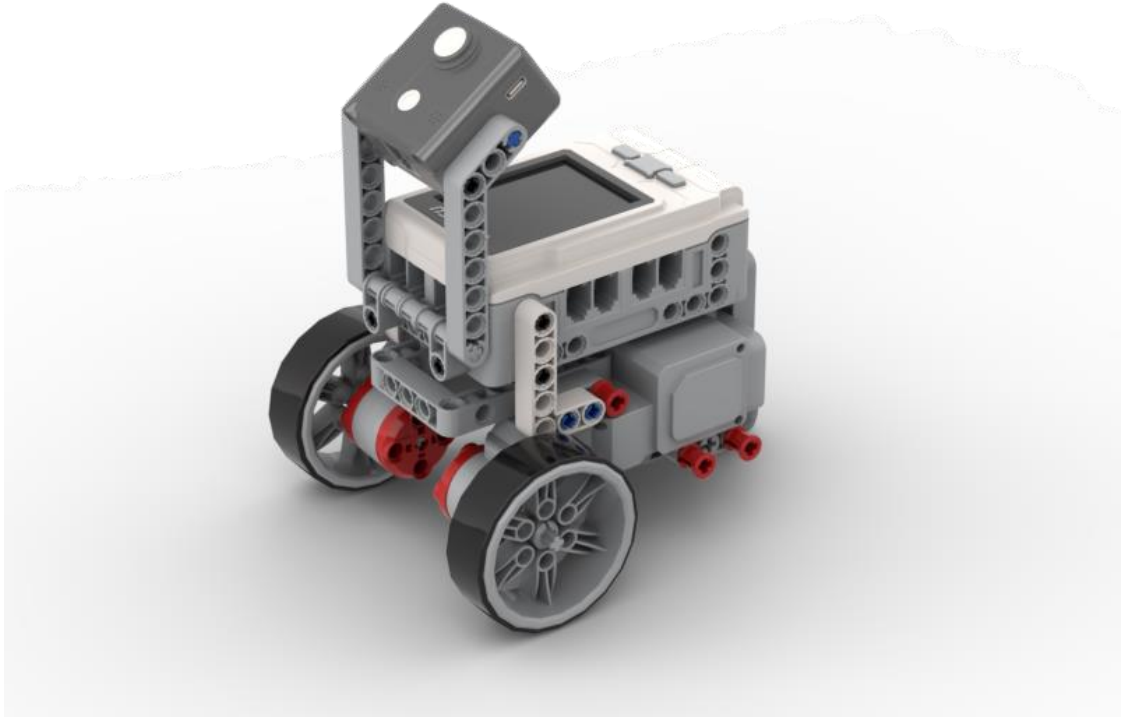

New knowledge



Color recognition

The AI audio-visual module has built-in recognition of four colors, red, yellow, green and blue. When the corresponding color object is recognized, the camera will surround the object with the corresponding color box, indicating what color the object is.

New knowledge

Software Modules

Module	Description	Application examples
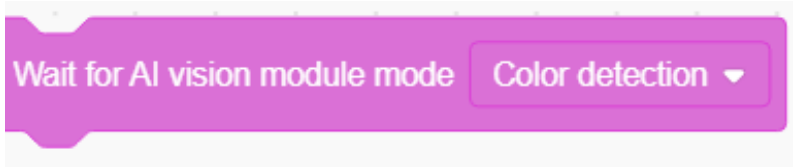	Set the color detection mode of the AI audio-visual module. Click "▼" to select the mode.	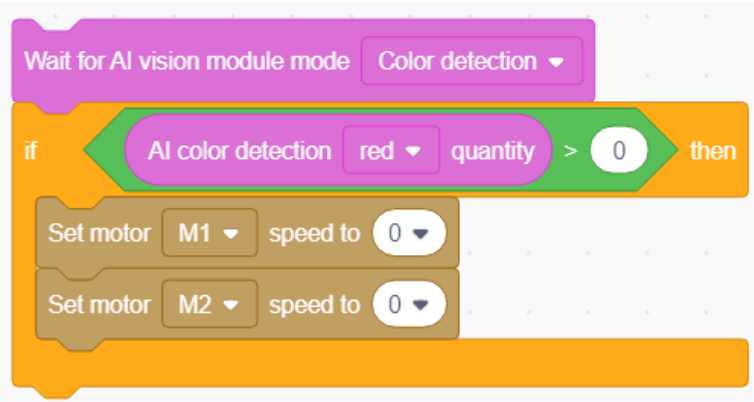
	Set the number of colors to be detected by the AI Audio Visual module. Click "▼" to select the color.	

Design and Assemble

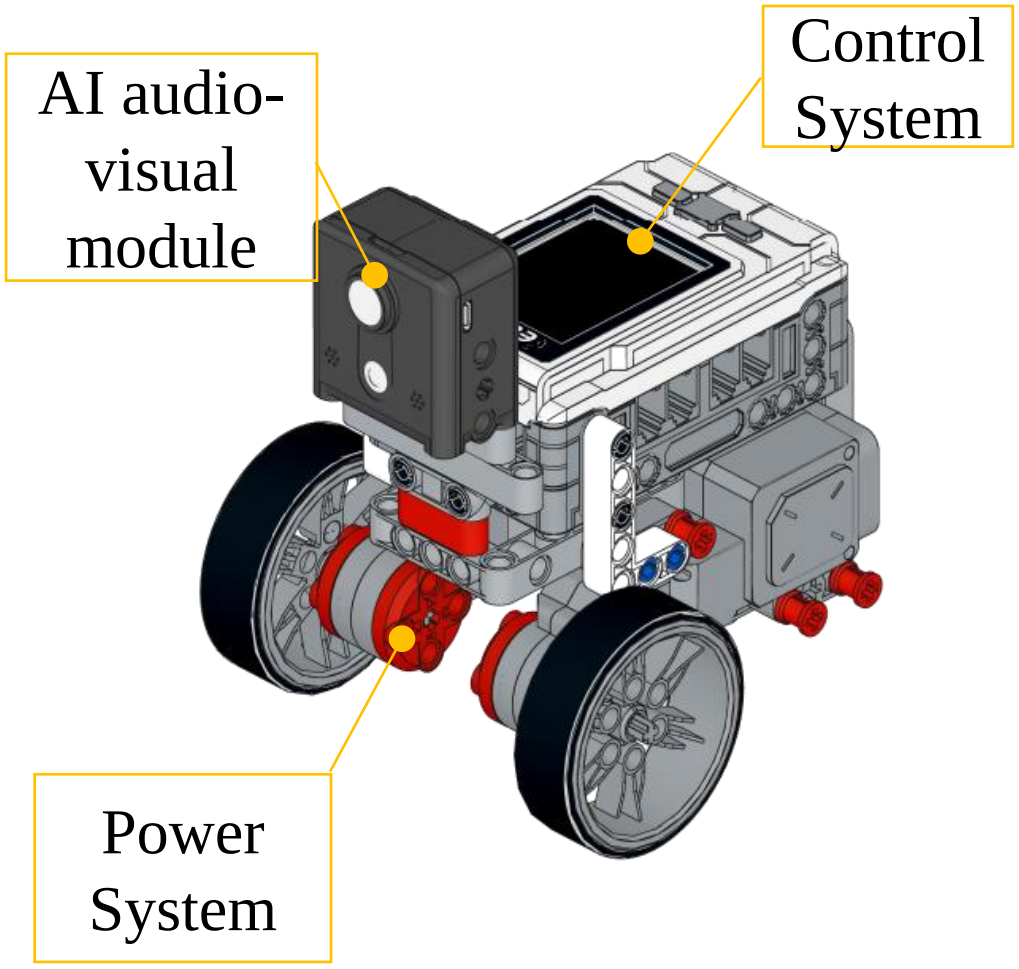

Build a model

Assemble a Probe vehicle robot according to the build manual to achieve the function of detecting hazards.

Design and Assemble

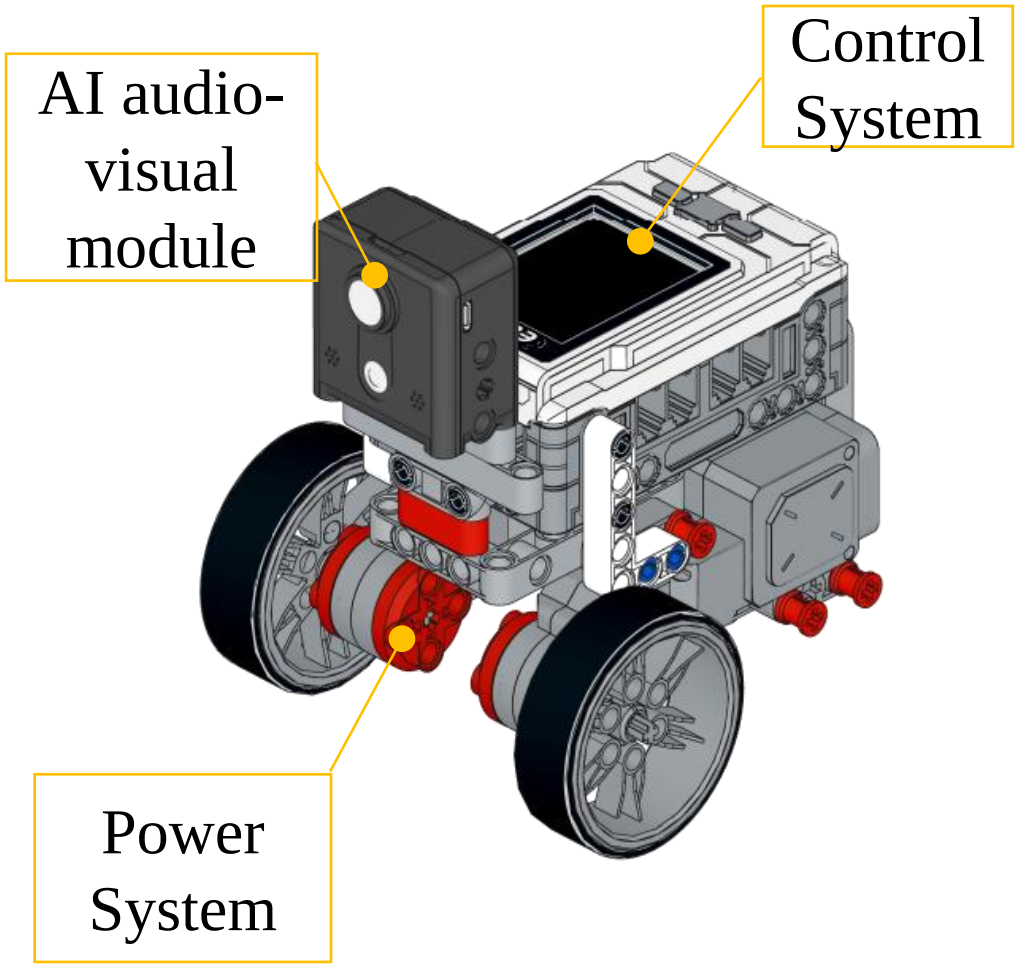

Build a model

In this lesson, we need to use two motors for the power system, a controller for the control system, and an AI audio-visual module. The motors are connected to M1 and M2 ports of the controller, and the AI audio-visual module is connected to P8 port of the controller.

Requirement: Install the AI audio-visual module on top of the hazard detection vehicle robot.

Programming

Programming idea:

When the program starts, it enters into color detection mode. Specific idea: when the hazard detection vehicle robot detects different colors, representing the different states encountered, the Probe vehicle robot performs the corresponding action.

Programming

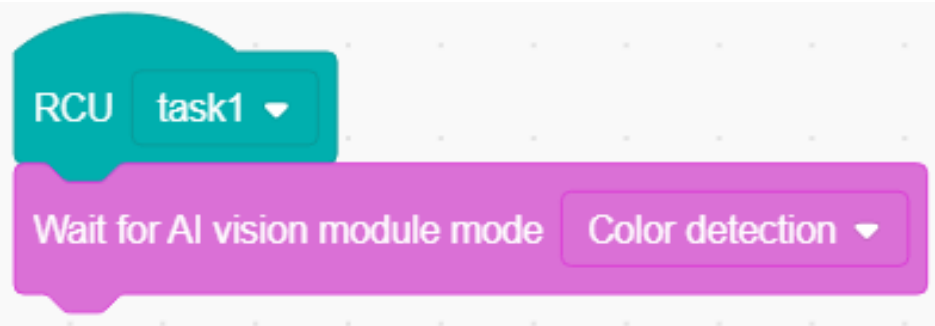

Next, follow the program flowchart to complete the program for the Probe vehicle robot.

We need to set the AI audio-visual module to "color detection" mode in order for the hazard detection vehicle robot to recognize hazards in red.

Programming

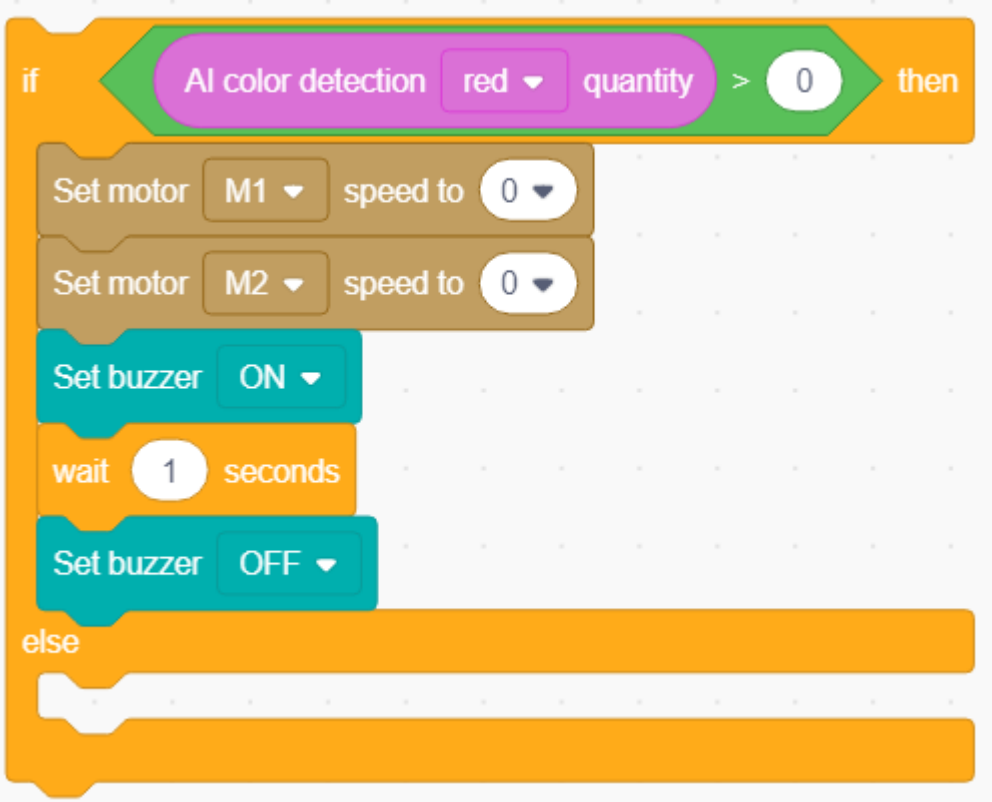

When the Probe Vehicle identifies a hazardous environment, the controller sounds an alarm and stops the hazard detection vehicle robot.

Programming

If the Probe Vehicle does not encounter a hazardous situation, then different actions are executed depending on the situation.

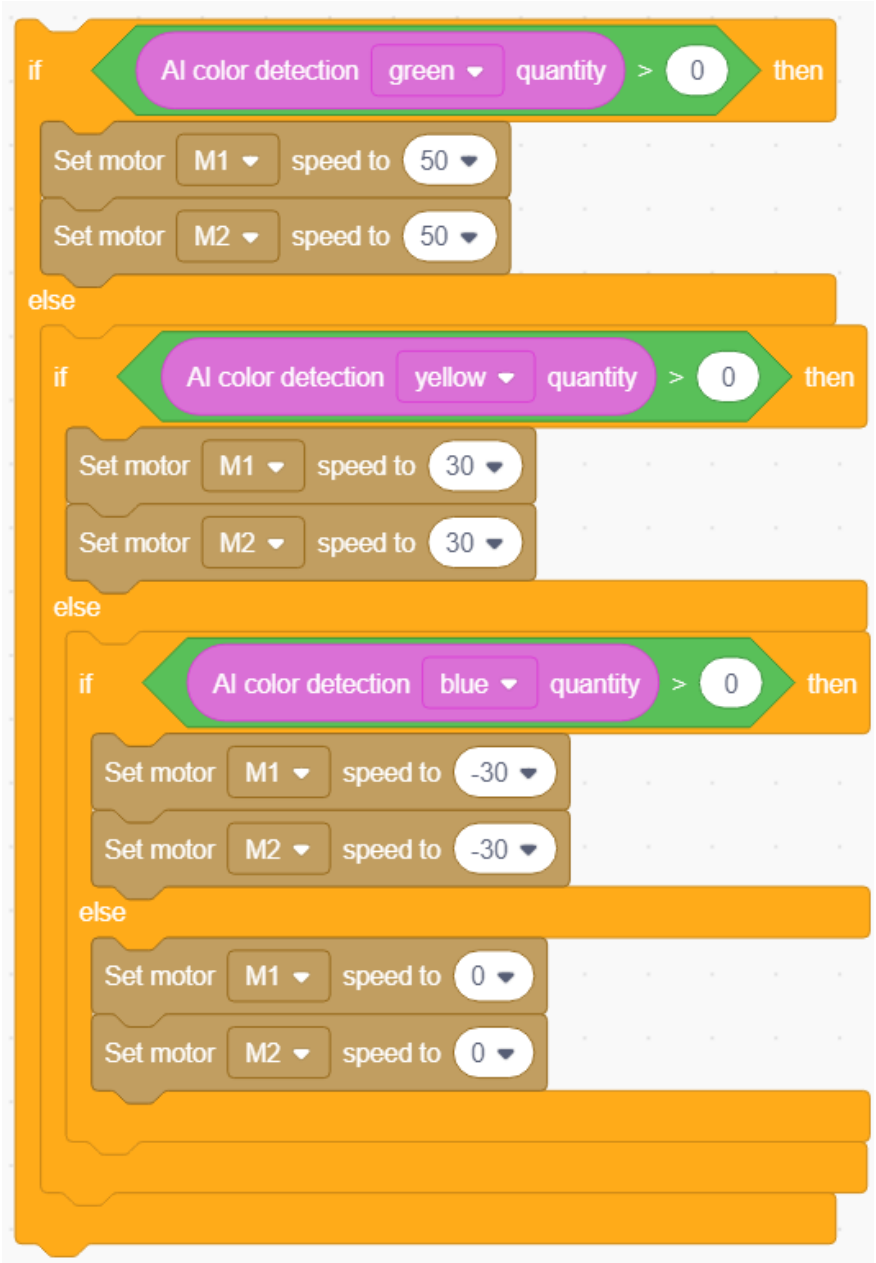

Programming

If the Probe Vehicle does not encounter a hazardous situation, then different actions are executed depending on the situation.

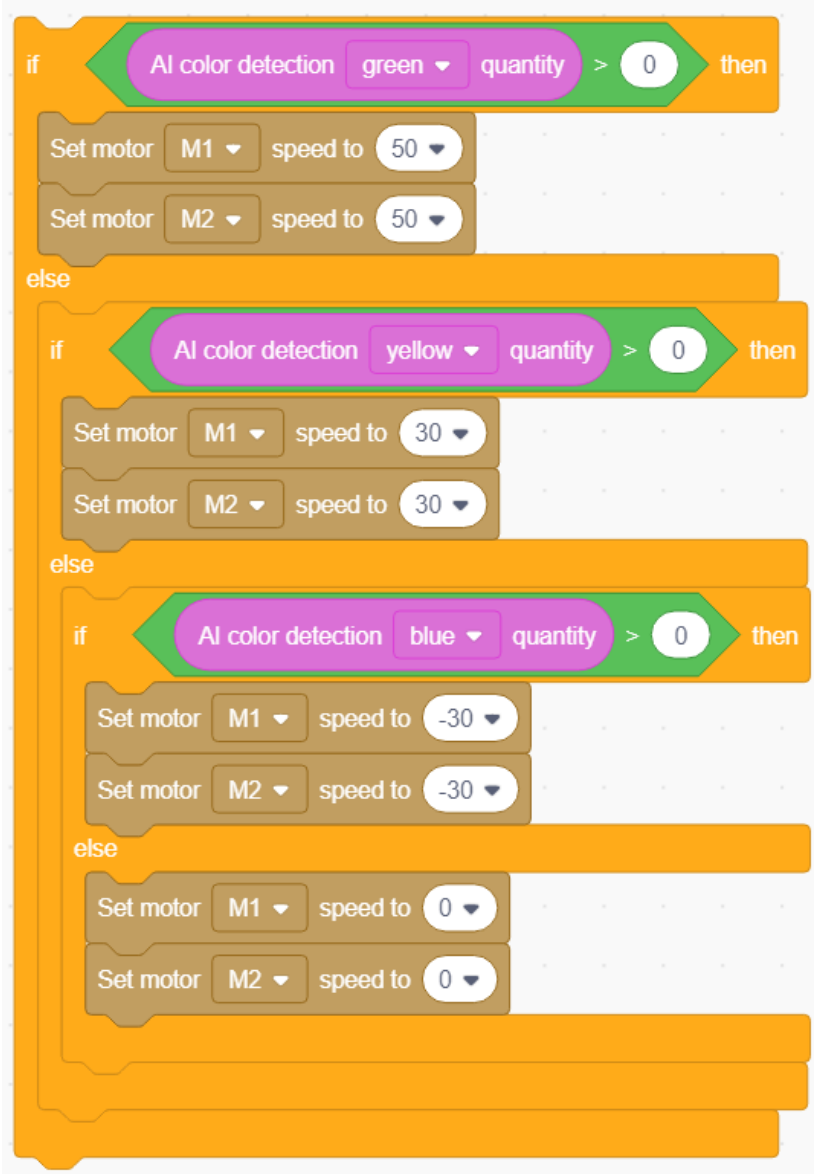

Programming

Finally, the above programs are combined and a "repeat execution" programming module is added to allow the hazard detection vehicle robot to repeat the results of the detection identification.

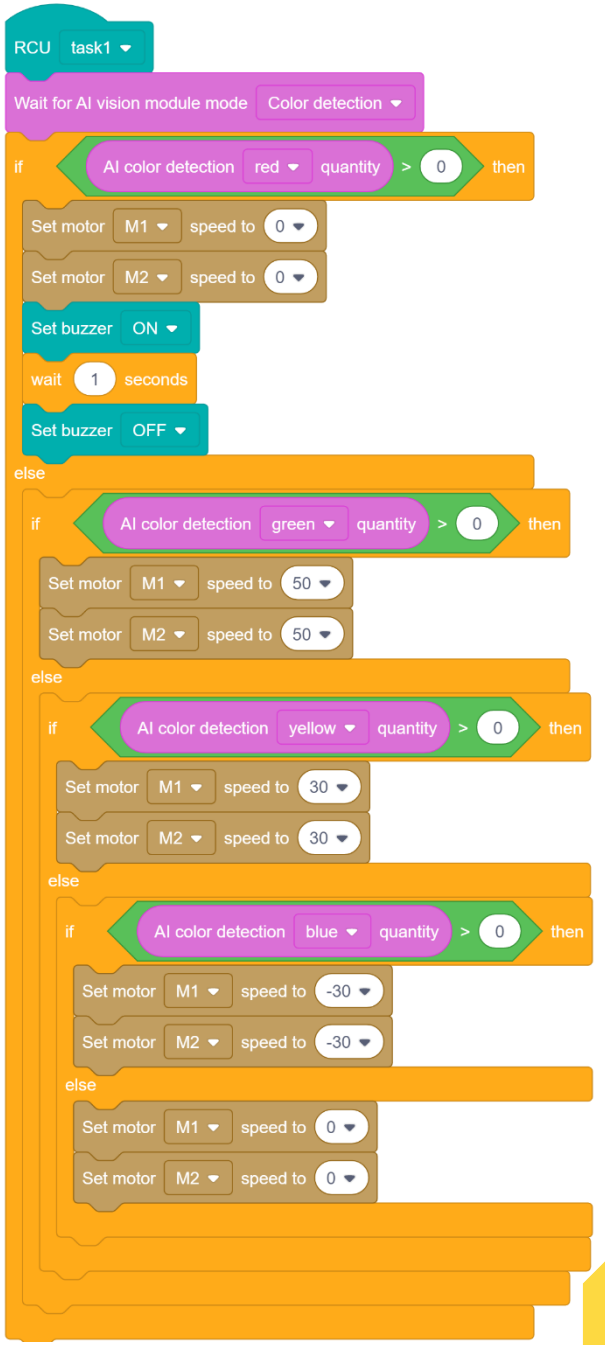

Programming

Sample Demonstration



Course Extension



Sorting machine

Sorting machines have an irreplaceable and important role in modern industry, allowing different objects to be placed differently depending on their characteristics. Some can be distinguished according to weight, some according to volume, and some according to color.

Sorting machines are convenient and highly accurate, avoiding errors that occur with manual sorting and improving work efficiency. This is why they are widely used in industrial production as well as in logistics and transportation.



Sorting machine