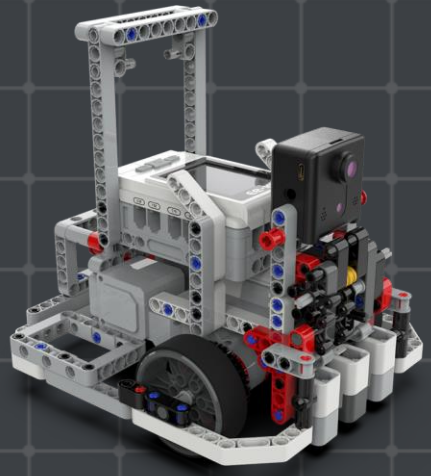

Lesson 2 | Color-changing Light |

Key points from this lesson:

1. Get a basic understanding of the color lamp module and how to control it

2. Learn to use sequence structures to write simple programs

Possible difficulties from this lesson:

1. Understand the program logic of sequence structure

Electric lamps and color-changing lights

The original purpose of the electric light was to provide a light source to illuminate the space at night. With the continuous advancement of technology, electric lights have gradually developed into different types and functions, and color-changing lights are one of them.





Color-changing lights

In modern society, color-changing lights are used in many scenarios. For example, during festivals and celebrations, people use color-changing lights to decorate houses, streets, and public places to create a strong festive atmosphere. In addition, color-changing lights are also widely used in stage lighting, exhibition lighting, and other fields, adding more gorgeous visual effects to performances and exhibitions.





Effect Demonstration



Project Tasks

Design a color-changing lamp model to allow the color lamp module to switch between different colors automatically.

Requirements for robot functions:

First, turn on the yellow light for 2 seconds, then turn on the red light for 2 seconds, and finally turn on the blue light for 2 seconds.

Color Lamp Module

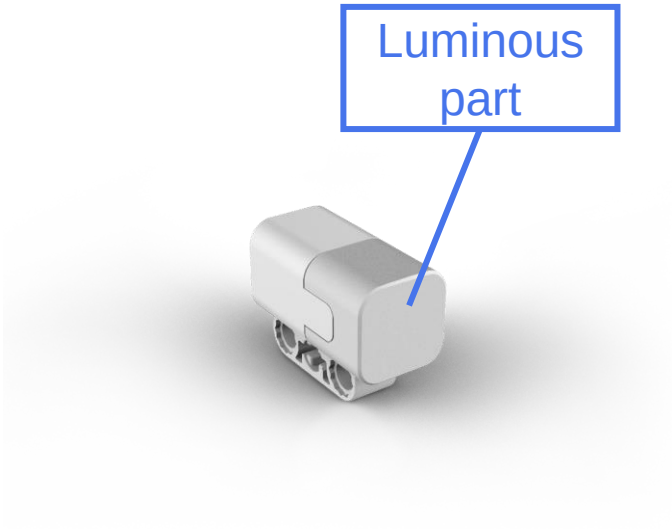

The color lamp module emits multiple colors of light, including red, green, blue, cyan, yellow, purple and white, through its built-in light-emitting components, and the light emission can be controlled by programming.

Connecting to the controller

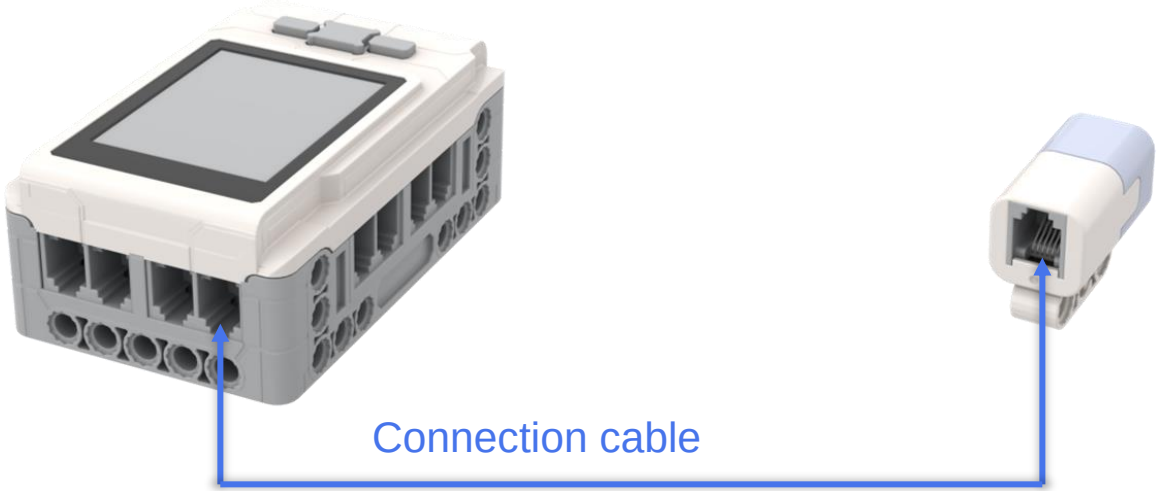

You can connect the color lamp module to any composite port (P1-P8) of the controller, such as the P1 port.

Test - Color LED

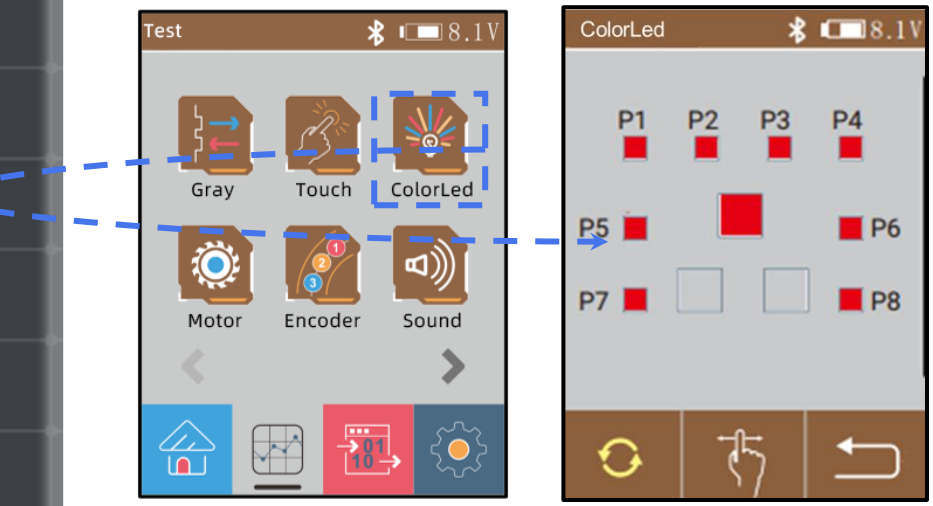

In the "Test" interface of the E6 controller, click "Color LED" to enter the colored light test interface.

At this time, the color lamp will emit different colors of light in turn.

Build a robot

1

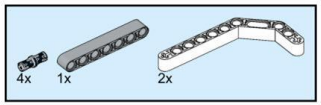

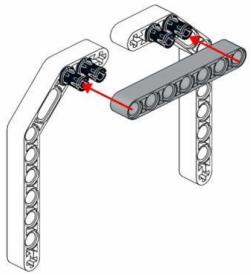

2

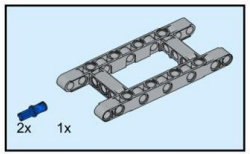

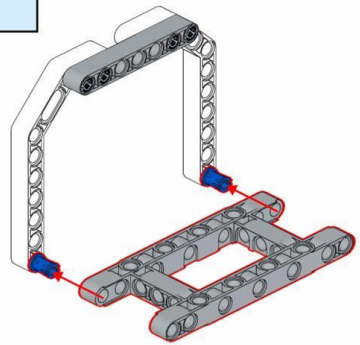

Install the light stand

Build a robot

3

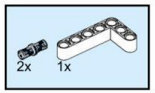

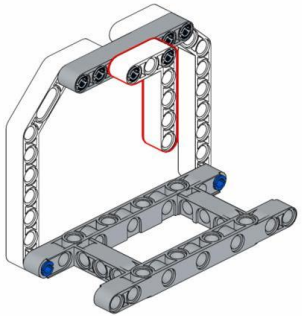

4

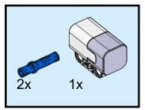

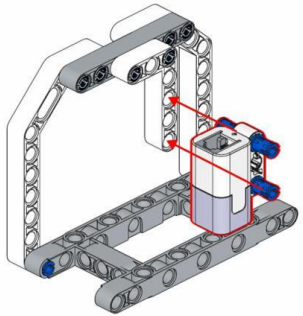

Install the color lamp

Build a robot

5

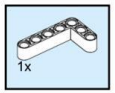

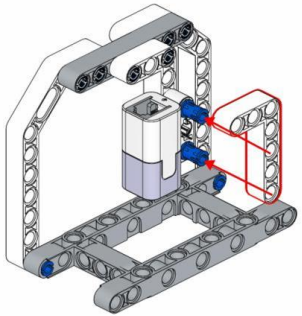

6

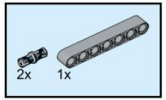

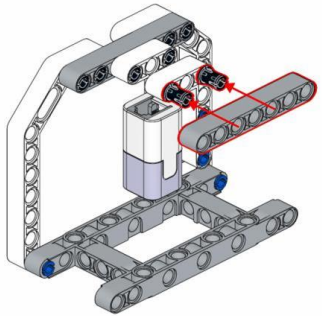

Build a robot

7

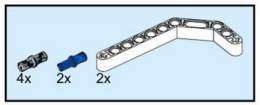

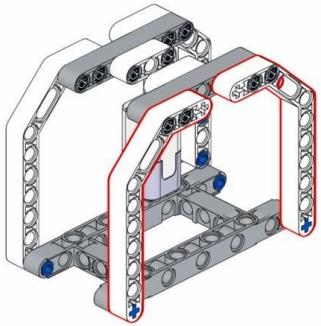

8



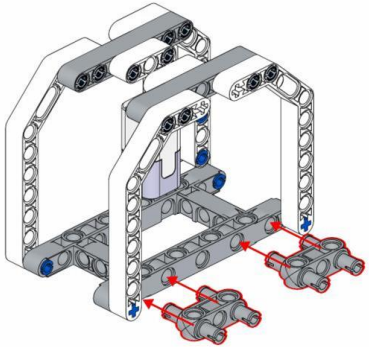

Build a robot

9

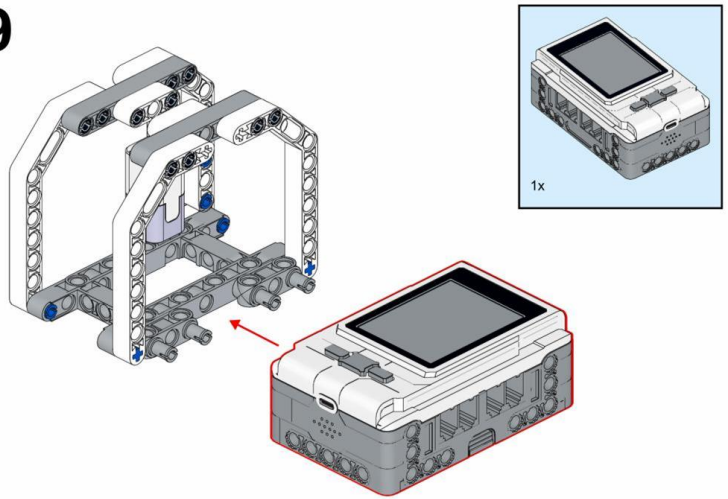

10

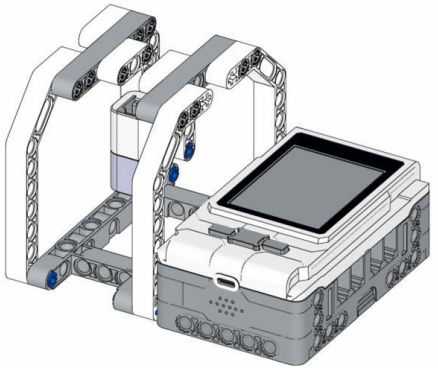

Install the controller

Hardware Connection

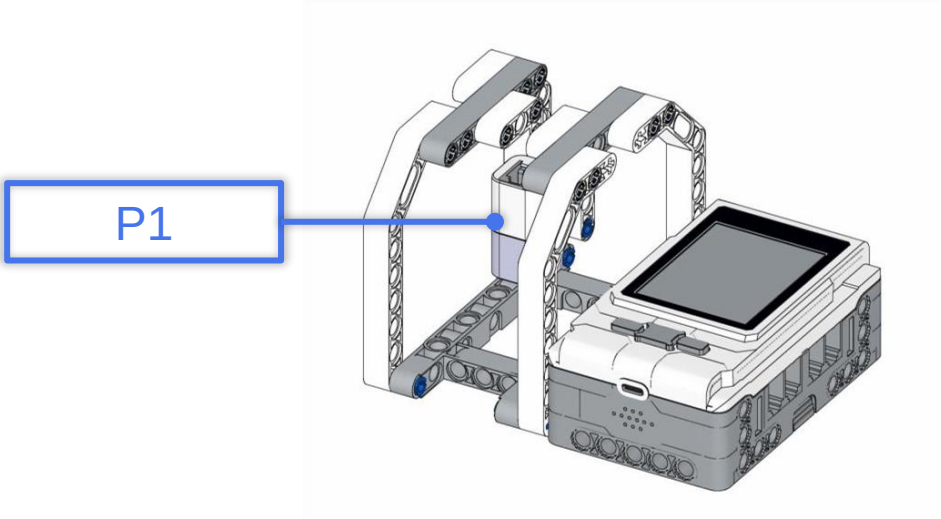

“

How to make a color lamp emit light of a specified color?

”

The coding block of the color lamp

This coding block can make the color lamp that is connected to the specified port emit light of the specified color.

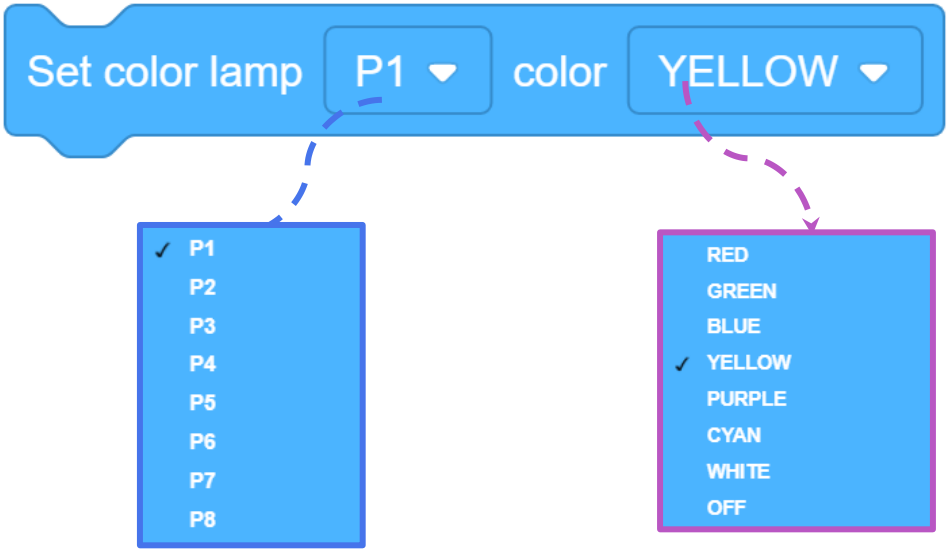

Composite port, "P1~P8" can be selected

For light color, you can choose from “red, green, blue, yellow, purple, cyan, white” and turn off the color lamp.

Control the color lamp by programming

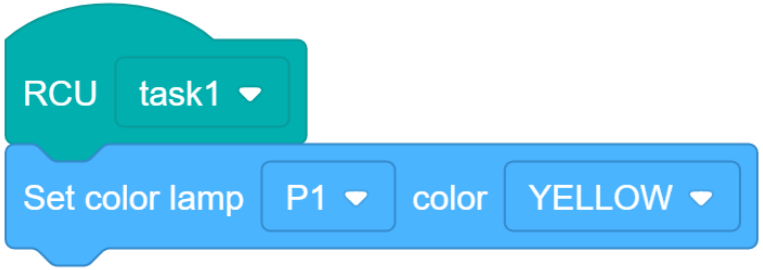

Please set the color lamp module connected to the P1 port and set its color as yellow, that is, make the color lamp turn yellow.

Download the program and run it for debugging.



“

How to make the color lamp emit different colors of light in sequence?

”

Wait（）seconds - Coding Block

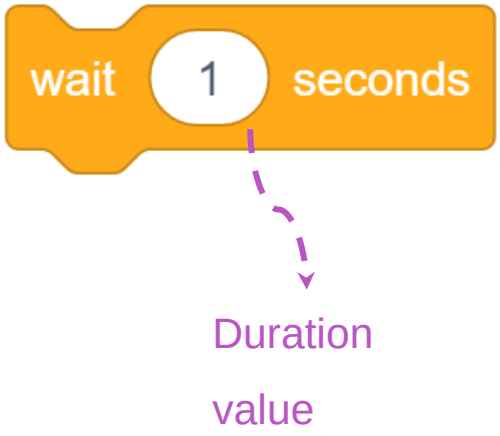

When the program runs to this point, it needs to wait for the specified time before running the program below it.

The duration value can be modified and can be a decimal in seconds.

Sequence Structure

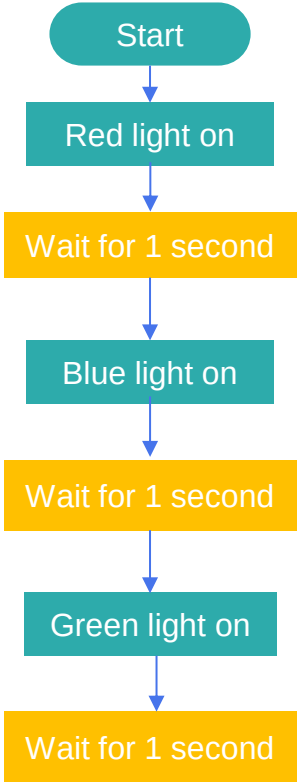

The Flow chart of sequence structure

The sequence structure is the simplest and most commonly used program structure. Just write the corresponding statements in the order of solving the problem.

The execution order is from top to bottom, one by one.

1. Yellow light on

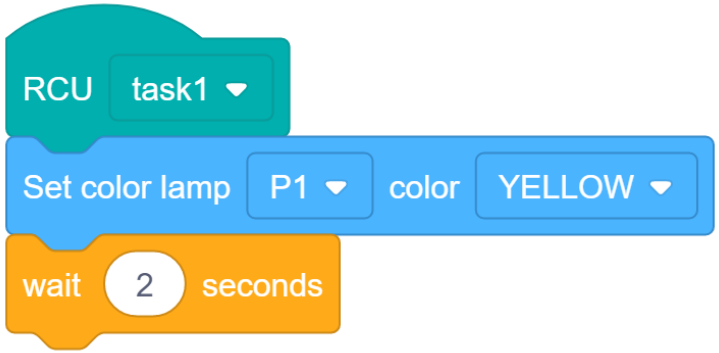

First, the yellow light turns on for 2 seconds.

2. Red light on

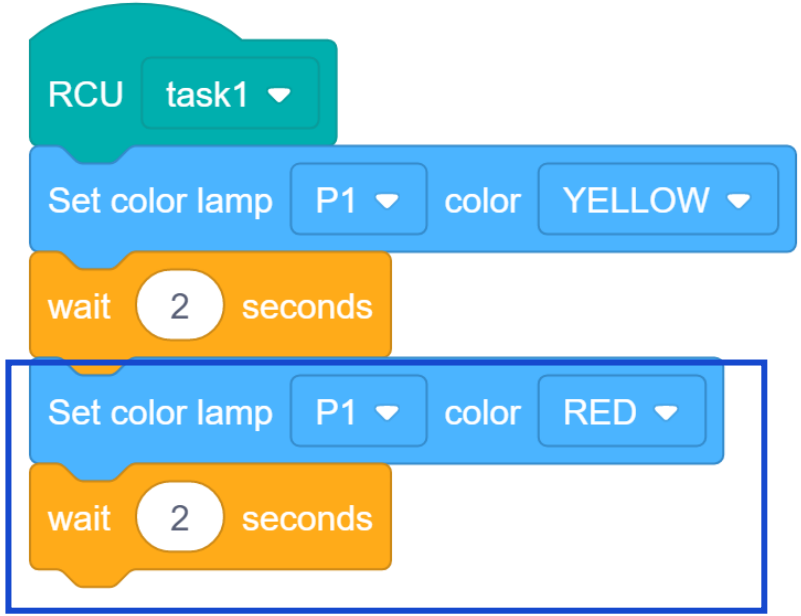

Then, the red light turns on for 2 seconds.

3. Blue light on

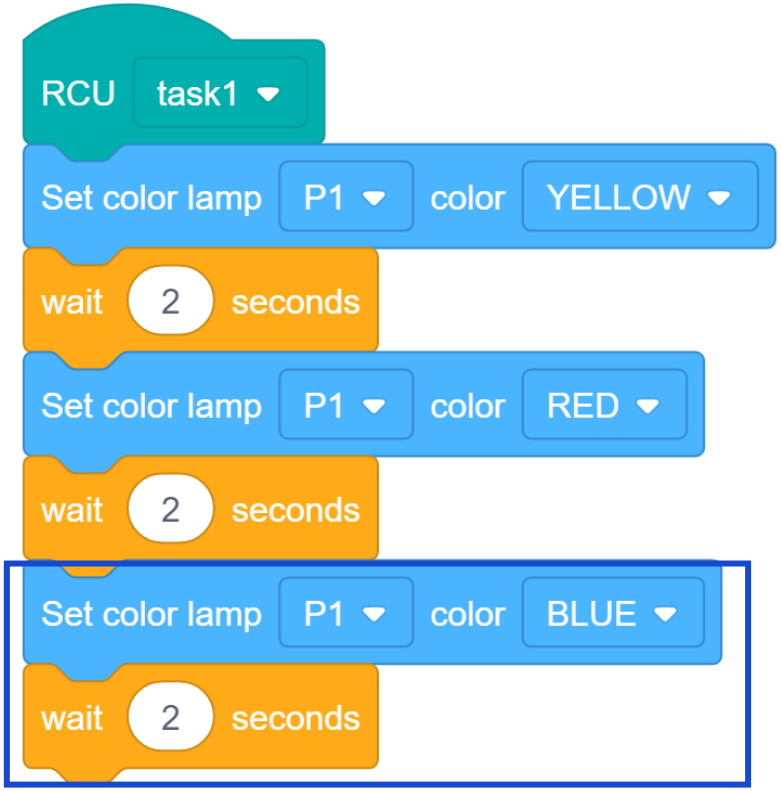

Finally, the blue light turns on for 2 seconds.

Expansion Tasks

Let the screen show the current color of the light.



Expansion Program

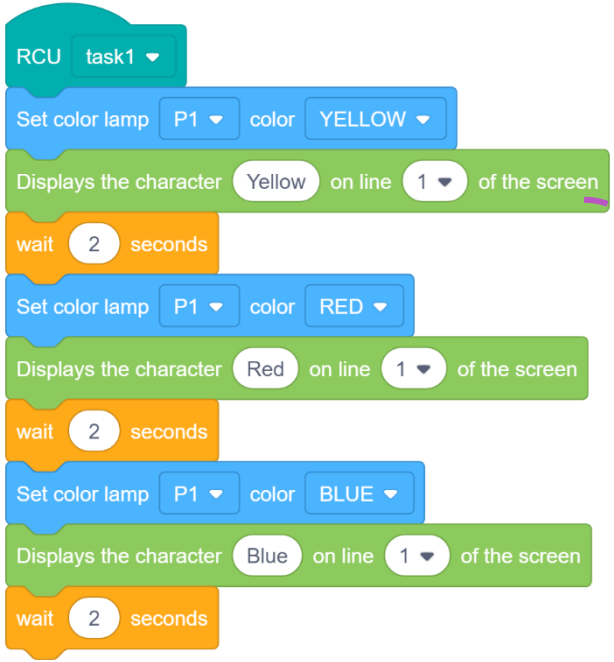

Displays the color of the current light on the controller screen

Quiz

Single-choice question

Which of the following descriptions is incorrect ( )

A. The color light module port can select “P1-P8”

B. The color light can emit orange light

C. The duration value of the "wait () seconds" module can be a decimal

D. The execution order of the sequence structure is from top to bottom, repeatedly executed

Answer: D

Further Reading



There are three common colored lights: LED colored lights, colored glass lights, and fluorescent lights. Different types of colored lights have different principles.

LED colored lights are colored lights that use LED light-emitting diodes as light sources. LED colored lights are usually composed of multiple LEDs, and the brightness, color, and flashing mode of each LED can be controlled by programming to achieve a variety of lighting effects.

Further Reading



Colored glass lights are colored lights that use colored glass as a light source. The colored glass in the glass lamp can transmit light of a specific color and reflect light of other colors. By adjusting the thickness and color of the glass, different lighting effects can be created.

Fluorescent lights are colored lights that use fluorescent powder as a light source. After being irradiated with light of a certain wavelength, fluorescent powder will emit light of different colors. By adjusting the type and proportion of fluorescent powder, different colors of lights can be created.

ZMROBO
ROBOT

Thanks!