Learning Series
Face (Mechanical mask)



This building-block programming kit introduces robotics and sensors.

The kit is equipped with various sensors such as sound sensitivity, color sensor, touch sensor, photoelectric sensor, color light, ultrasonic, camera and many building blocks parts. Students can build various building block robots with their imagination, and use graphical programming software to program the robot and experience the joy of hands-on creation.

Learning Target

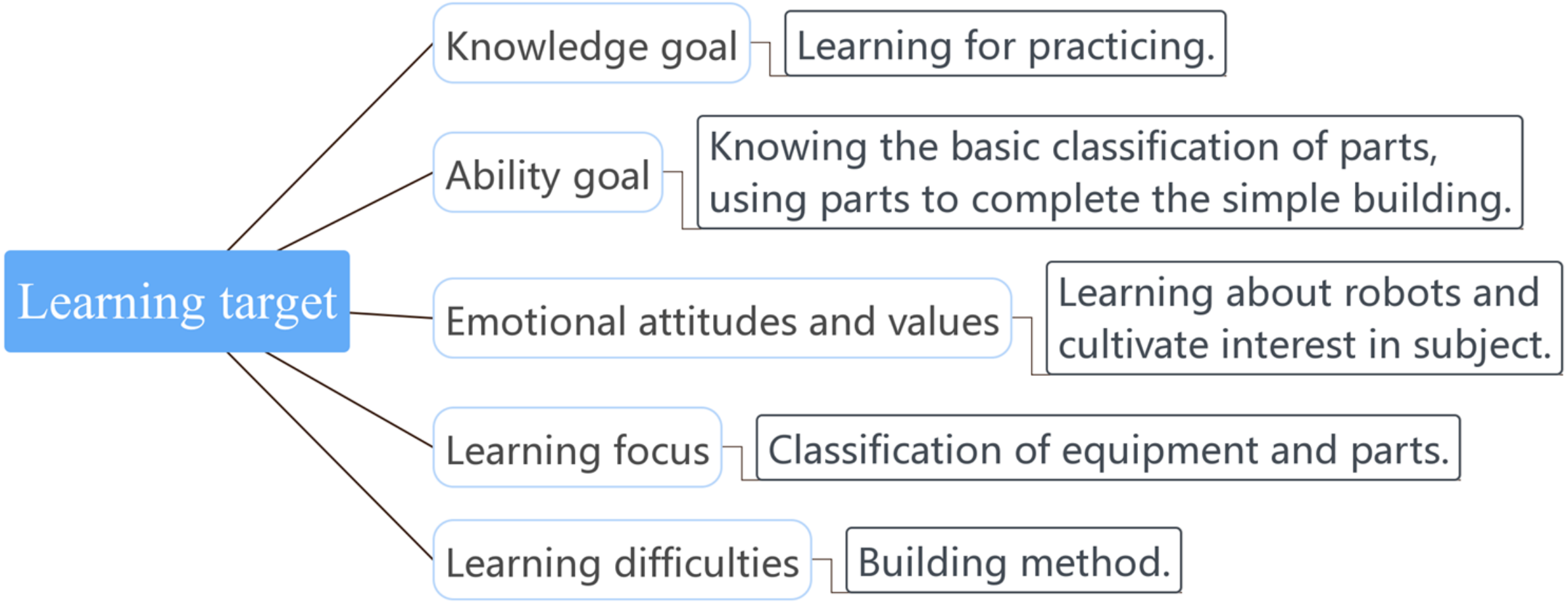

Contents

1 Course introduction

2 Teaching new knowledge

3 Task practice

4 Test effect

Course Introduction



Course Introduction



What do you think of the mask? Should it be round or flat?

Mask (noun), a covering that covers all or part of a face, which is specially worn as a camouflage, or entertaining or intimidating others.” In many other cultures on the Congo River continent, the mask is only a part of the bundle that is used to cover the majority of the body of the wearer.

Course Introduction

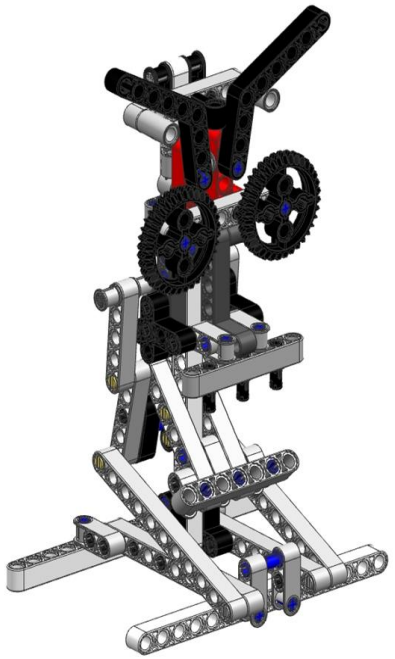

Mechanical mask

Skilled in the use of the cooperation of different parts to complete the design and assembly of the "mask".

We need to pay attention to the production. The “mask” is very similar to the facial features of the wearer. For example, the mask used by the average person has a special pattern in addition to the features of the five features. The purpose is to camouflage or enhance the ornamental.

Teaching New Knowledge



Teaching New Knowledge

Mask

- type: placed type / wearing type
- direction: face / animal / other
- structure: base / wearing fixture
- shape: generally corresponding to the simulacrum corresponds to five features and main features



Teaching New Knowledge

Equipment matching (Set the concept as a placed face mask)

Base: Use larger parts to maintain the center of gravity, such as large beam parts.

Neck: The direction of the connection between the base and the head is changed. Reasonable use of blocks and peg parts.

Head: Complete the building of the facial features with parts with similar shapes, for example, the gear parts correspond to the eyes.



Task Practice



Task Practice

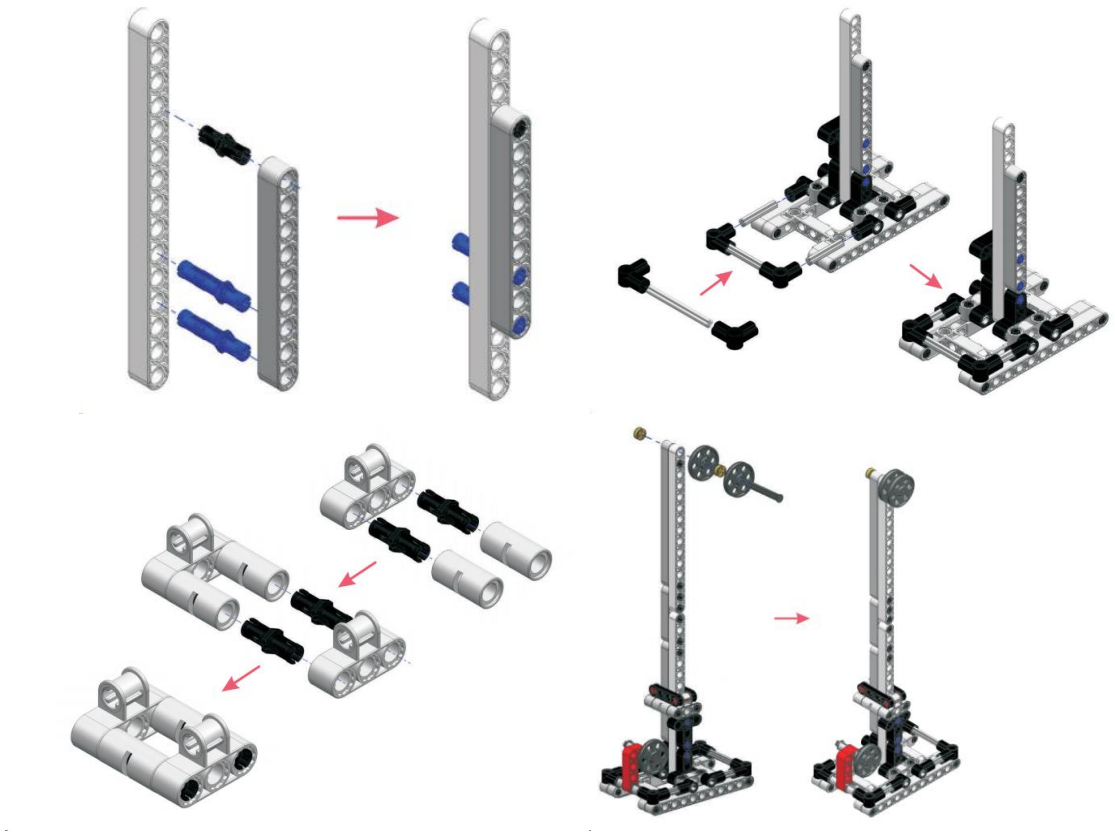

Assembly requirements

①stable structure

②proper gravity

③shape match

Checking Effect



Test Effect



Reviewing the learning content and deepen the impression.

Question 1 What is the name of the robot made today?

Question 2 What materials are used in today's robots?

Question 3 What type of robot do you design?

Test Effect



Homework

Explain and demonstrate according to your works, such as the name of works, the source of inspiration, what is the most satisfactory part of the design, and comment on each other.

Thank you for watching.

BE STEM READY

