3. Autonomous Driving

Content

1 Theme Introduction

2 Learning Objectives

3 New knowledge

4 Design and Assemble

5 Programming

6 Course Extension

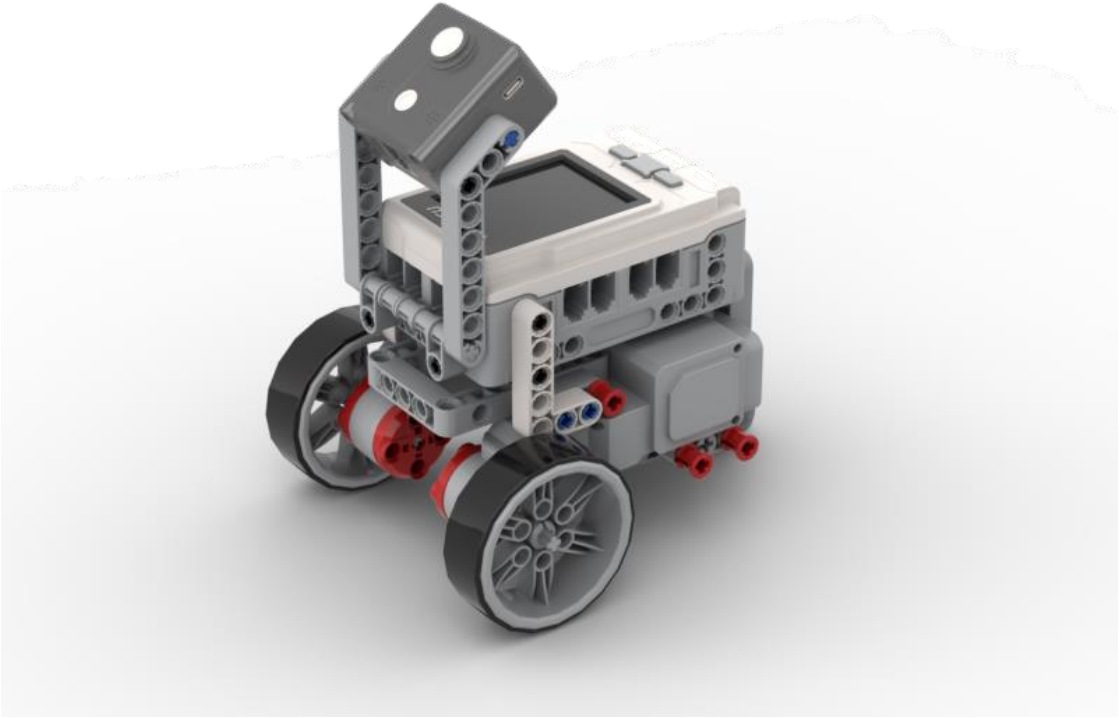

Theme Introduction



Driverless cars are no longer imagined in science fiction films. At the Wuhan Military Games, AIMO unmanned patrol police vehicles made a big splash. Around obstacles, identify traffic lights, turn or turn around, etc., in a state without personnel control, these vehicles can be set on the route, showing its superior "driving" technology.

Theme Introduction



Driverless Cars use on-board sensors to sense the vehicle's surroundings and control the vehicle's steering and speed based on the road, vehicle location and obstacle information obtained from the perception, while cameras are used to identify roads, traffic lights and various traffic signs, etc.; there is also the assistance of global positioning system in order to allow the car to travel safely according to the established route and eventually reach its destination.

Learning Objectives

1. understand the principle of road identification

2. Learn to use the road identification mode of AI audio-visual module

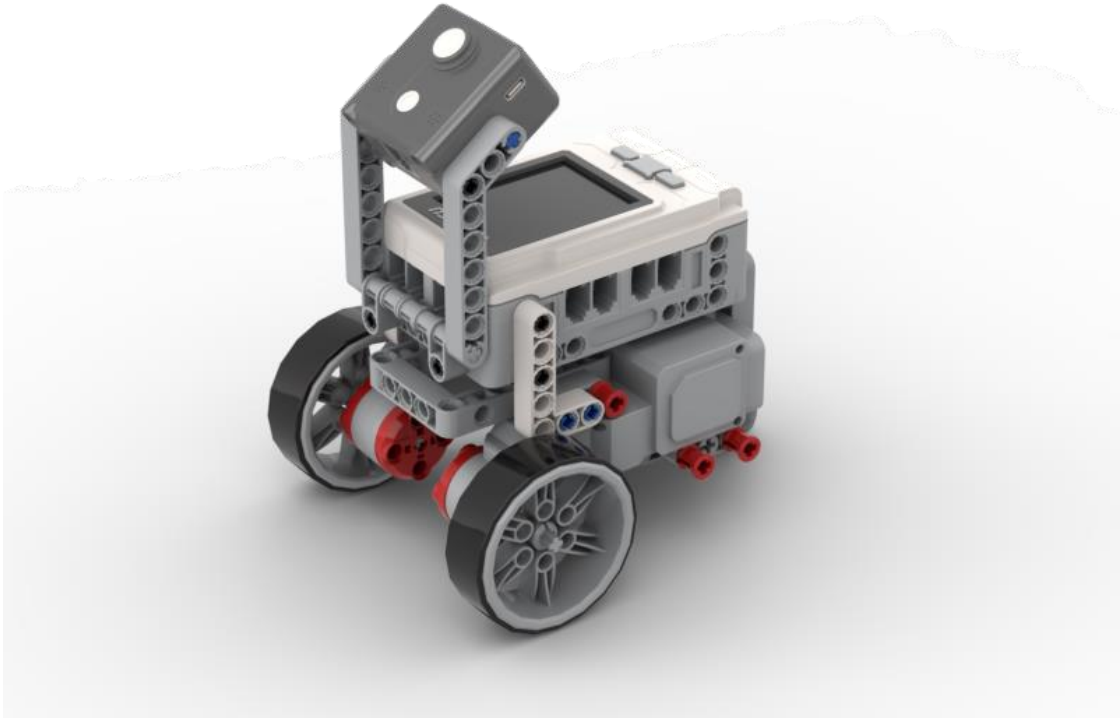

New knowledge

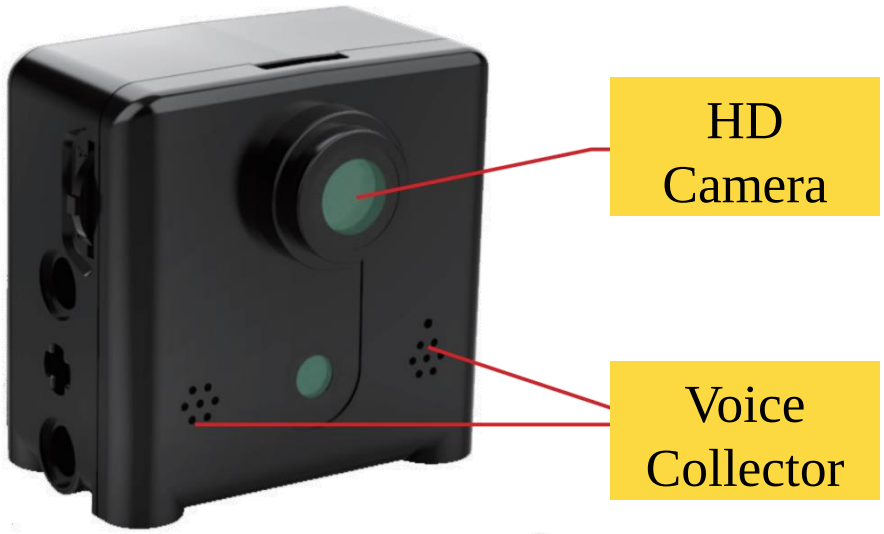

Road recognition

The AI audio-visual module uses the camera to identify the offset value of the marking on the ground (that is, the road) to determine the position and the direction of travel. They can adjust the speed of the left and right wheels, so as to ensure that the autonomous driving robot is always on the marking during the process of automatic driving.

New knowledge



Road identification

When the self-driving robot is in the middle of the reticle, the offset value is 120. When the reticle is to the left, the offset value is less than 120; when the reticle is to the right, the offset value is greater than 120.

New knowledge

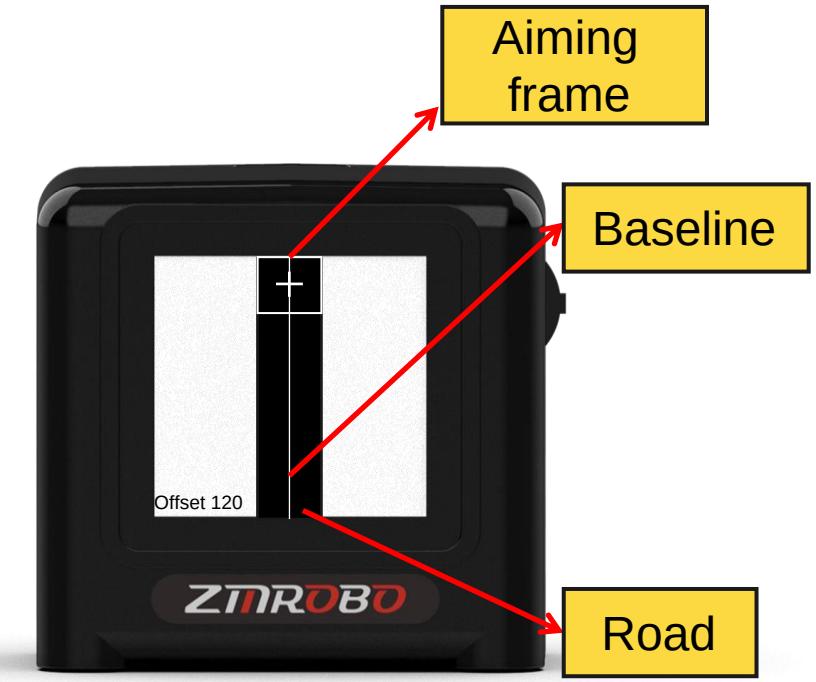

Road identification

When the AI audio-visual module enters the road recognition mode, a white baseline and a white aiming frame will appear on the screen, and the offset value will be displayed in the lower left corner. The baseline is used to detect the offset value of the road. The aiming box is used to capture the extent of the road and will vary depending on the width and location of the road. When the road is a straight line, the aiming frame captures the road range, and the baseline detects the road offset value of 120.

New knowledge

Software Modules

Module	Description	Application examples
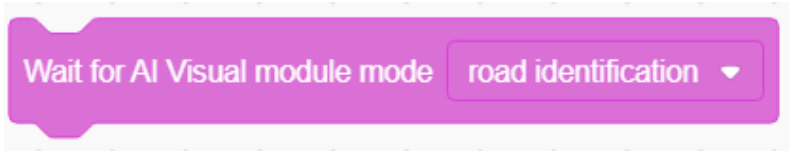	Set the road detection mode of the AI audio-visual module. Click "▼" to select the mode.	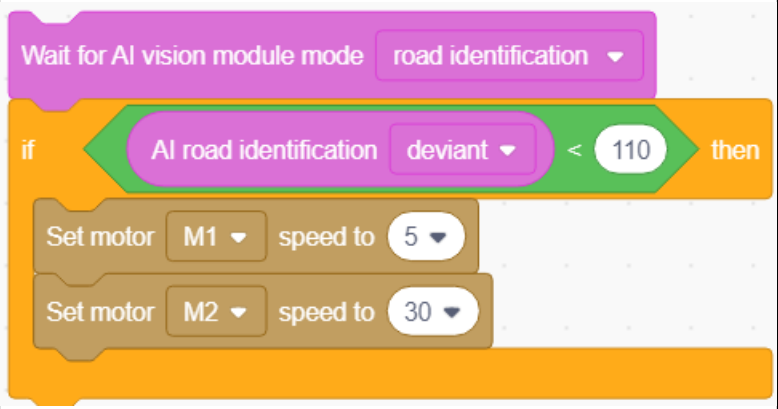
	The road direction can be identified based on the offset value.	

Design and Assemble

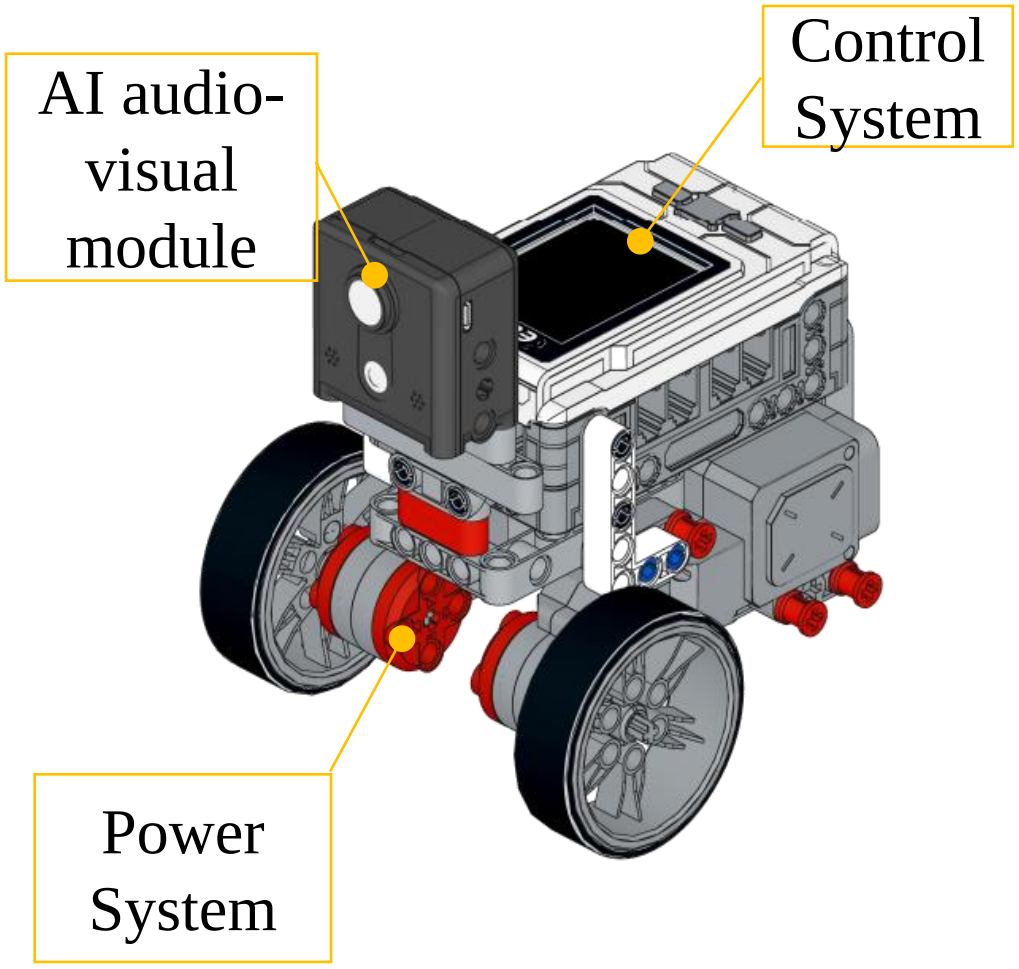

Build a model

Assemble an autonomous driving robot according to the building manual to realize the function of autonomous driving.

Design and Assemble

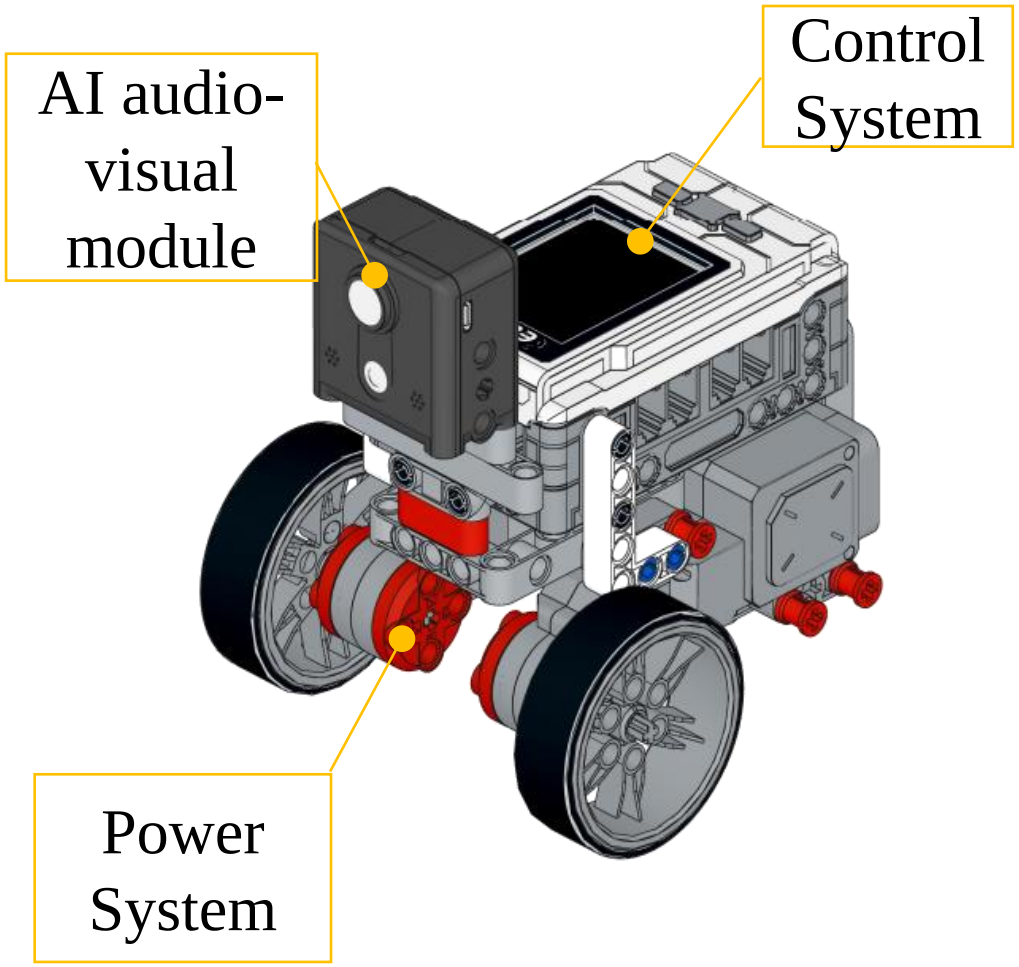

Build a model

In this lesson, we need to use two motors for the power system, a controller for the control system, and an AI audio-visual module. The motors are connected to M1 and M2 ports of the controller, and the AI audio-visual module is connected to P8 port of the controller.

Requirements: Install the AI audio-visual module below the autonomous driving robot.

Programming

Programming idea:

When the program starts, it enters into road recognition mode.

Specific idea: when the self-driving robot recognizes the road offset value, it identifies the direction where the road is located according to the offset value, and thus performs actions such as going straight, turning left and right.

Programming

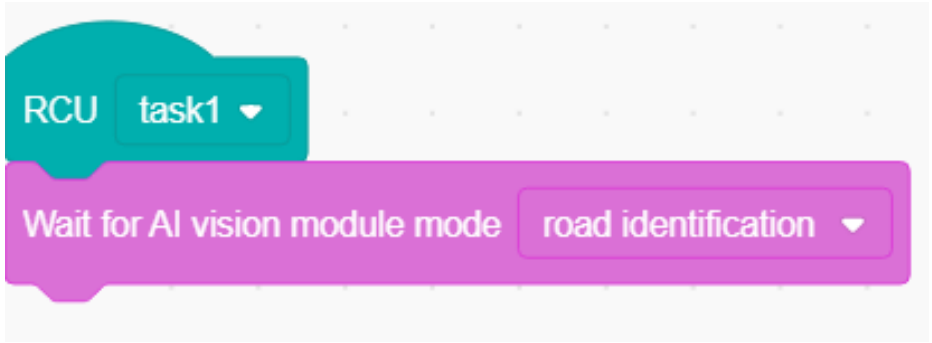

Now let's start programming the autonomous driving robot.

Switch the AI audio-visual module to “**road identification**" mode. In this mode, the module will return a result from 0 to 240 after recognition, with smaller values indicating that the road is to the left, and conversely, larger values indicating that the road is to the right. The value right in the middle is 120.

Programming

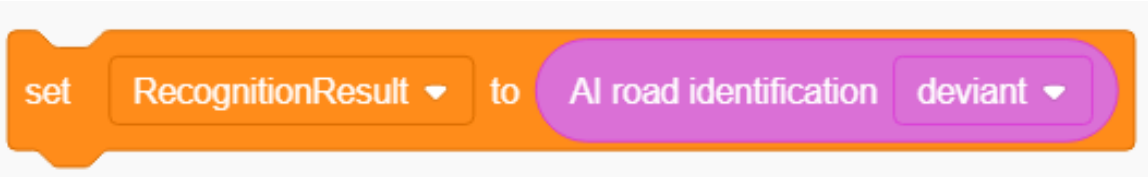

Create a new variable named “Recognition Result" to record the returned recognition results.

Programming

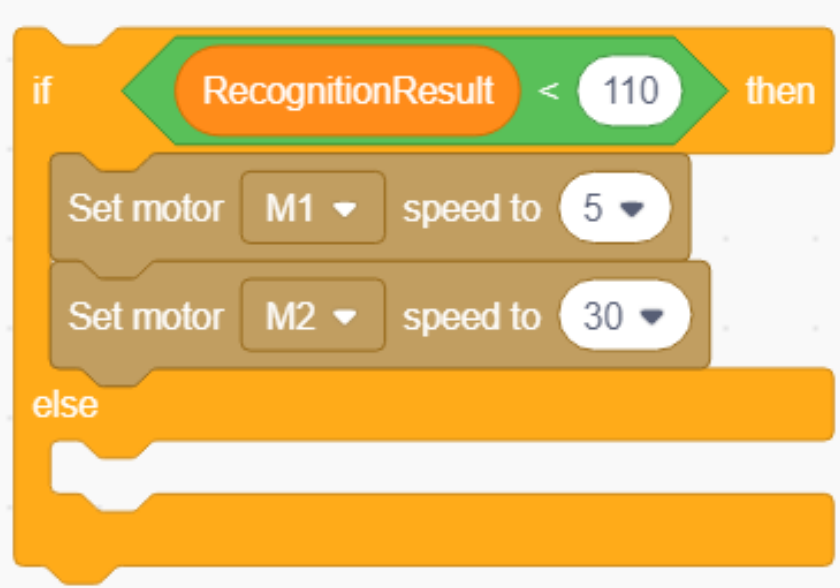

If the recognition result is less than 110, it means the road is on the left side of the autopilot robot and the auto-driving robot turns to the left.

Programming

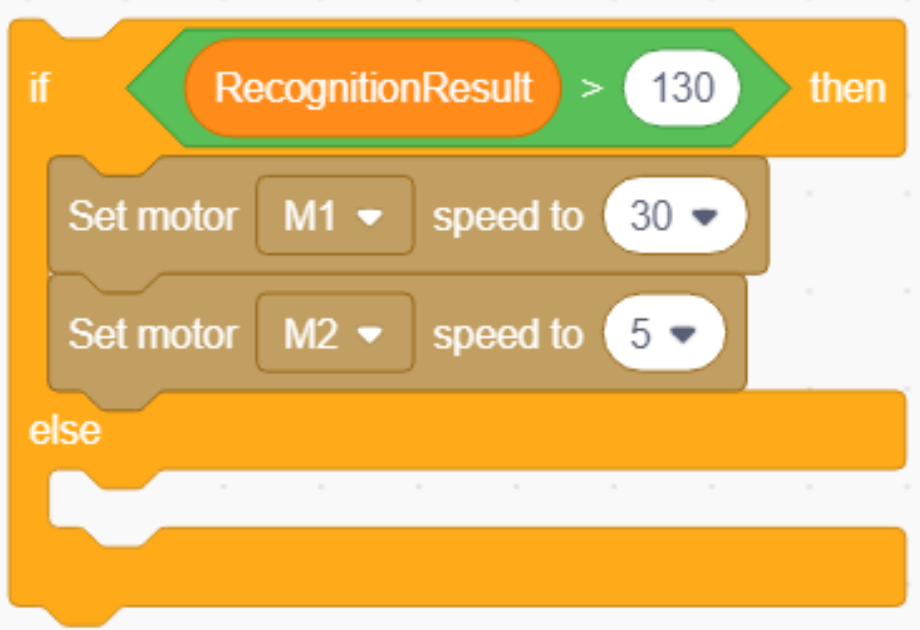

If the recognition result is larger than 130, it means the road is on the right side of the autopilot robot, and the auto-driving robot turns to the right.

Programming



If the recognition result is between 110 and 130, it means the auto-driving robot is in the middle of the road and moves forward.

Programming

The complete programming of the self-driving robot is completed by integrating the programs together and adding a "repeat " programming module to keep the programs executing.

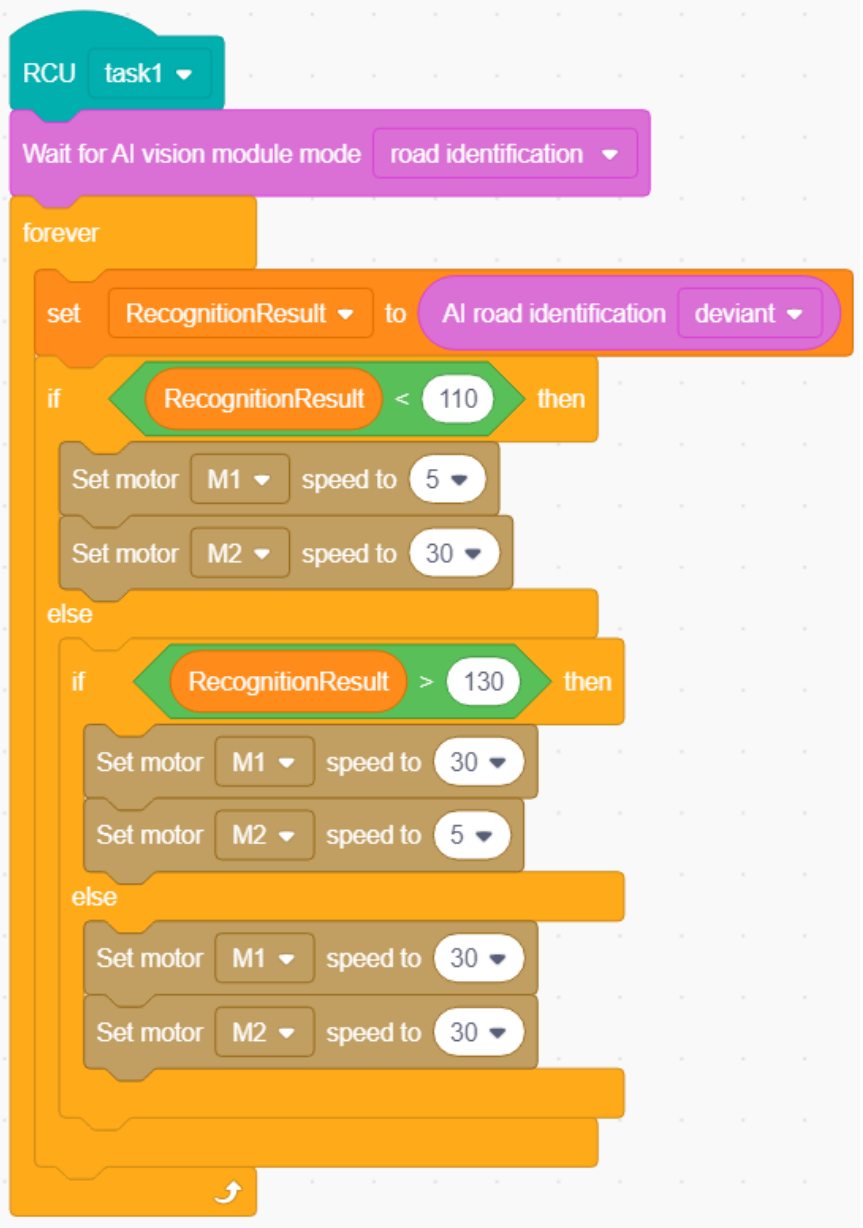

Programming

Sample Demonstration



Course Extension



AVG cart

AGV trolley is a kind of transportation vehicle that can travel along the prescribed path, with safety protection and loading function, we can also call it unmanned handling vehicle, automatic navigation vehicle or light navigation vehicle. It can be used in warehousing, hazardous places, industrial production.

The AGV cart consists of a variety of systems, of which there are three key systems, namely the control system, the guidance system and the operation system. It is these three systems that allow the AVG cart to meet a number of applications.



AVG cart