Learning Series



This robotics kit is a building block programming robot research and development by Joinmax. The kit is equipped with various sensors such as sound sensitivity, color sensor, touch sensor, photoelectric sensor, color light, ultrasonic, camera and many building blocks parts. Students can build various building block robots with their imagination, and use graphical programming software to program the robot and experience the joy of hands-on creation.

Learning Target

01

Knowledge goal

Learn about the practical use of the pulley block.

02

Ability goal

A simple analysis of the structure and the use of equipment to complete the corresponding case.

03

Emotional attitudes and values:

Contrast learning, begin the analysis process under the guidance of the teacher.

Learning Target

01

Learning focus

Reasonable use of the pulley in the mechanism to change the direction and effort of the force.

02

Learning difficulties

Force analysis of the pulley block.

Course Introduction



Course Introduction

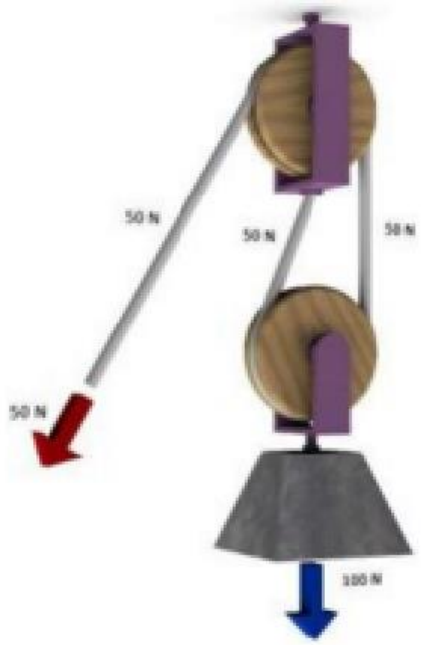

With multiple pulleys together, you can still tell which is the moving pulley which is the fixed pulley?

In this unit, we have learned the relevant knowledge of fixed pulleys and moving pulleys, and also understand the mechanical analysis of pulleys. In real life, the application of the pulley is more in the form of multiple matching, it can meet our requirements according to our actual needs, now let's take a look.

Course Introduction

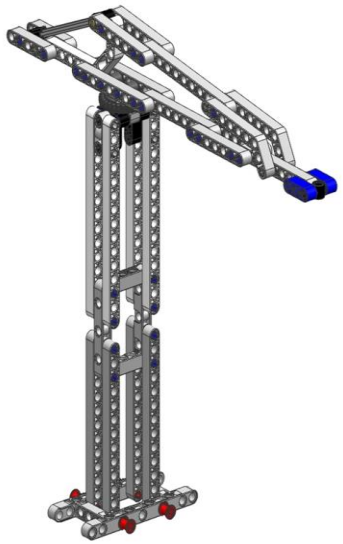

Tower crane

Know about the Tower Crane

Tower cranes and cranes are very similar in function, but there are obvious differences. The crane can be moved at any time, and the objects being hoisted are relatively small. The tower cranes will not move at all (the speed will increase with the progress of the building), while the objects that are hoisted are generally heavy and are usually used on construction sites.

Teaching New Knowledge



Teaching New Knowledge

Pulley block: A machine composed of multiple pulleys is called a “pulley block” or a ‘multiple pulley’.

The pulley block is a simple machine assembled from a plurality of movable pulleys and fixed pulleys, which can save labor and change the direction of force.

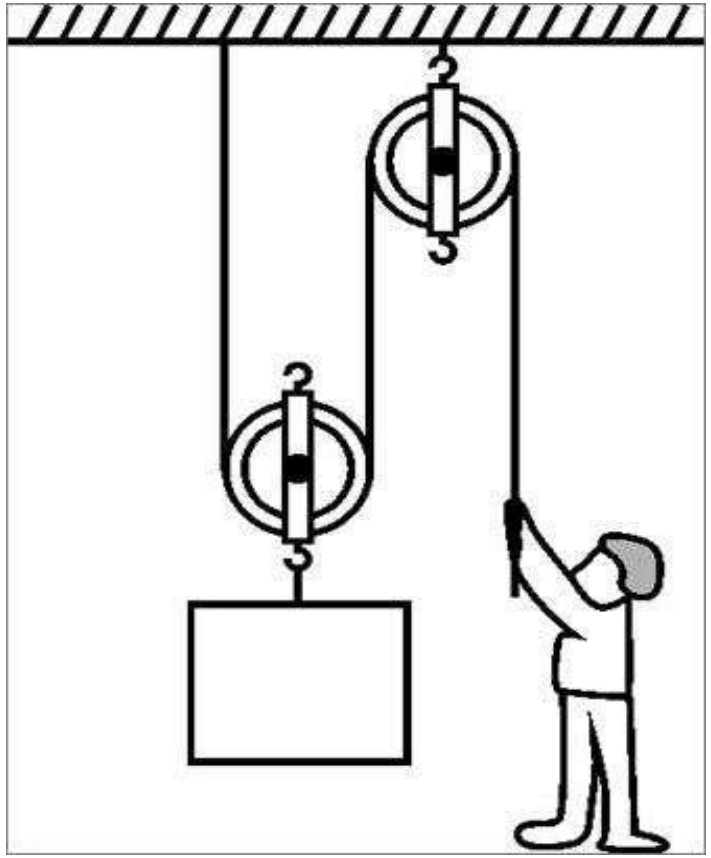

Teaching New Knowledge

The characteristics of the pulley block: the mechanical benefits of the pulley block are large, and the heavy load can be pulled. However, the pulley block also retains the characteristics of the movable pulley, saving labor and distance. The labor saving of the pulley block is determined by the number of rope strands, and the mechanical efficiency is determined by the gravity of the pulled object, the gravity of the moving pulley and the friction.

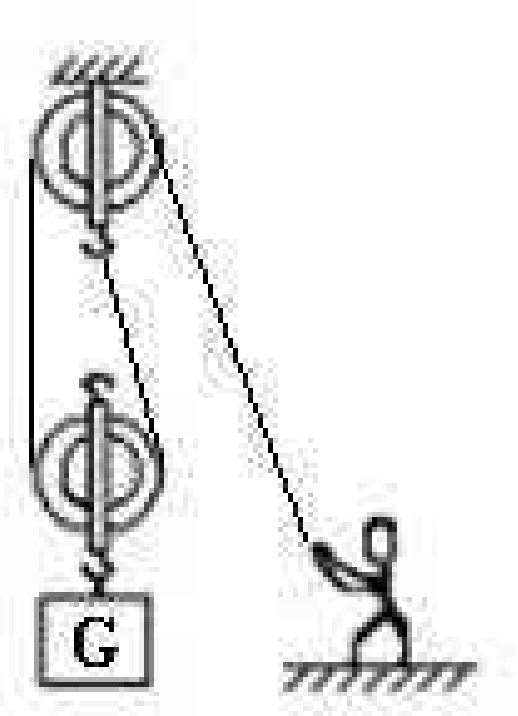

Teaching New Knowledge

Formula: (selection)

1s=nh 2 v rope = n*v object 3F pull = (1/n) * G total

Note:

s: The distance the free end of the rope moves.h: the height at which the weight is lifted.

v rope: The speed at which the free end of the rope moves (rises/falls).

v: The speed at which the object moves (rises/falls).

n: The number of rope segments that are loaded (the rope connected to the moving pulley).

f: Pulling force.

g total: weight + pulley weight (g + g slip).

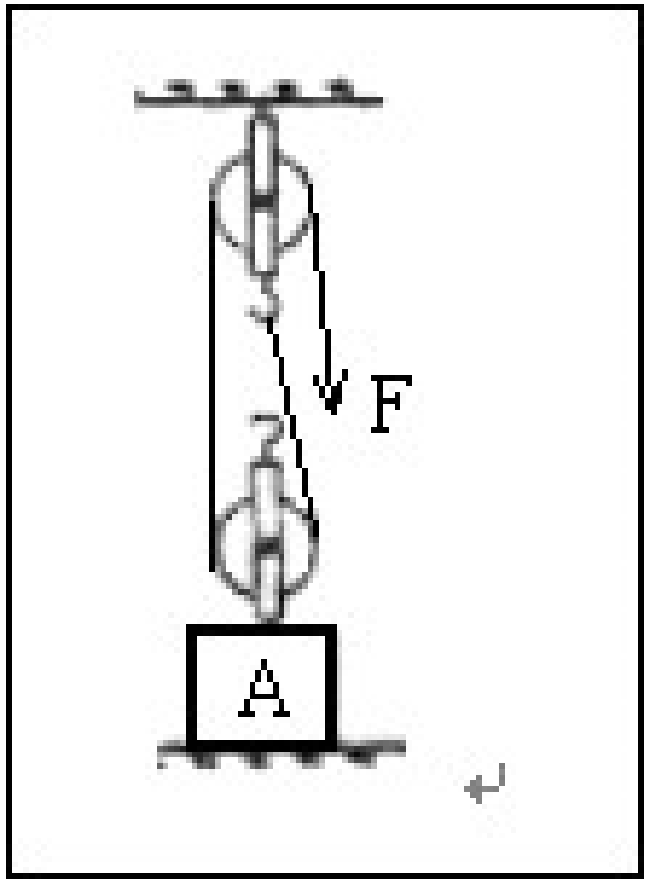

Teaching New Knowledge

Pulley block considerations

1 There is no pulley that is both labor-saving and distance-saving

2 When using the pulley block, the pulley block uses several ropes to hang the object, and the force used to lift the object is a fraction of the weight of the object.

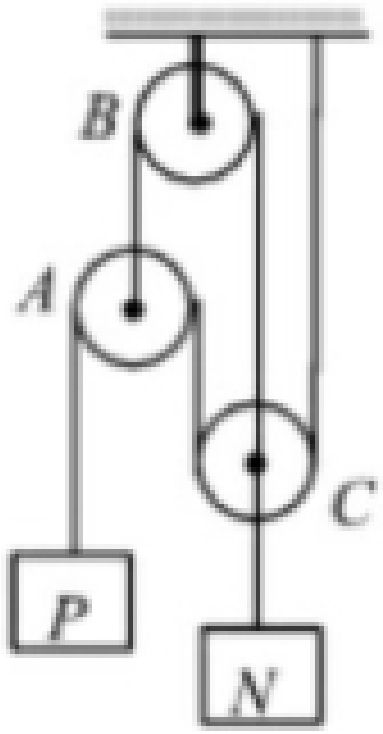

Task Practice



Task Practice

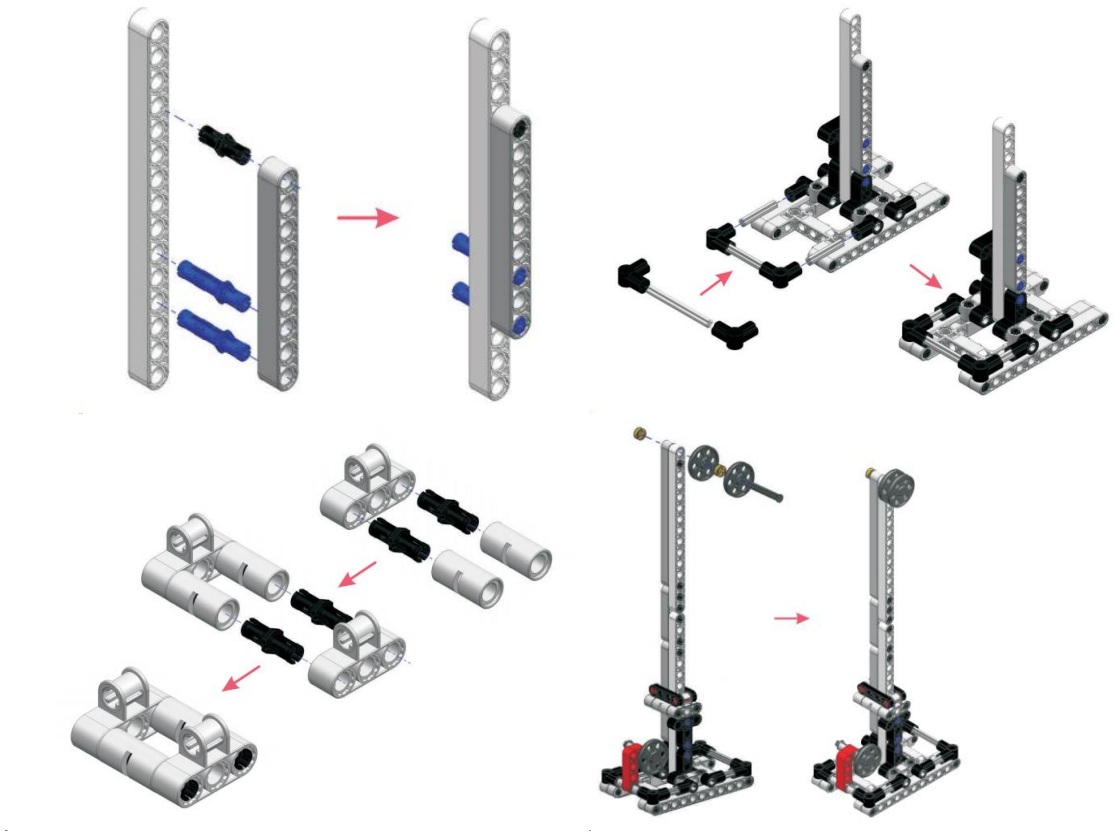

Assembly requirements

①stable structure

②focus is right

③shape match

Checkin g Effect



Test Effect



Reviewing the learning content and deepen the impression.

Question 1 What is the name of the robot made today?

Question 2 What structure does the robot use today?

Question 3 Can you explain the relationship between s, h, and F in the pulley block?

Thank you!

BE STEM READY

