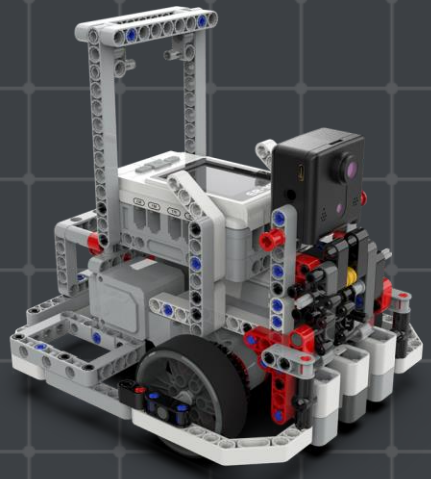

Lesson 3 | Spanish Bullfight |

Key points from this lesson:

1. Understand the variable increment operation

2. Learn to update the variable value based on conditional judgment

Possible difficulties from this lesson:

1. Understand the changing process of variable values

2. Master the naming rules of variables

Spanish Bullfight

Spain has a very famous traditional activity: Spanish bullfighting. In bullfighting performances, bullfighters will have a series of confrontations and performances with bulls to show their skills and courage.





Bullfighting



During the show, the bullfighter uses a red cape to attract the bull's attention, and the provoked and enraged bull will charge and attack the bullfighter.

The bullfighter will then stab the bull's specific part with a sword or spear to make it lose its fighting power.

Effect Demonstration

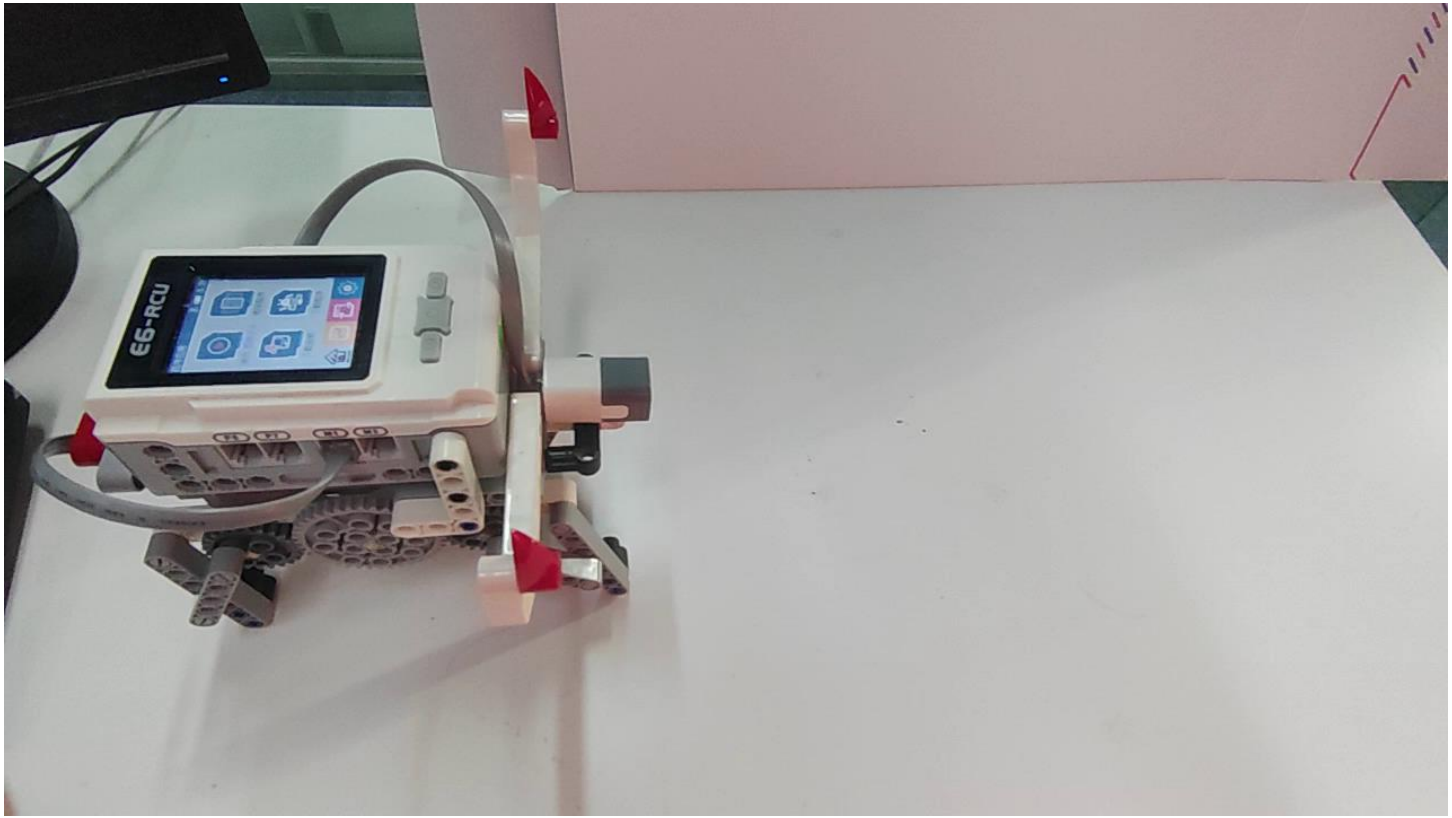

Project Tasks

Design a bull model and control it by using a color sensor.

Requirements for robot functions:

1. When the bull is provoked (the head detects a red object approaching and leaving), it will charge forward.

2. The speed of the charge increases with the number of provocations.

3. If the bull is not provoked for a period of time, the bull will return to its original state (the accumulated number of provocations will be reset to zero).

Build a robot

1

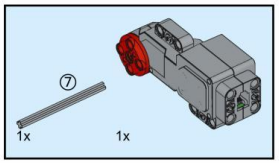

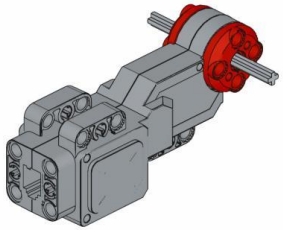

2

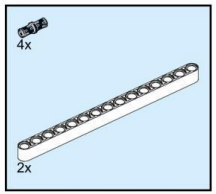

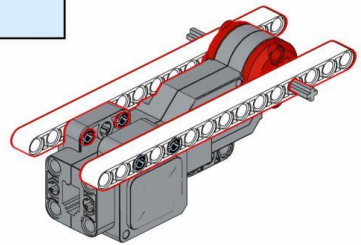

Build a robot

3



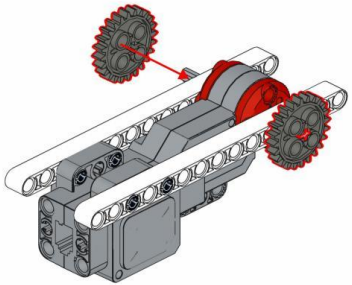

4

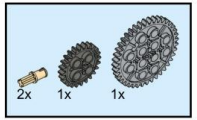

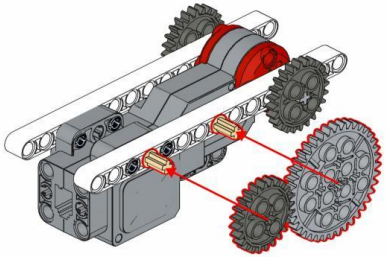

Build a robot

5

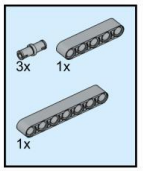

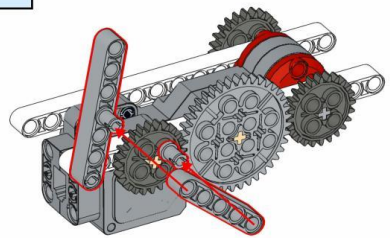

6

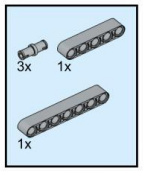

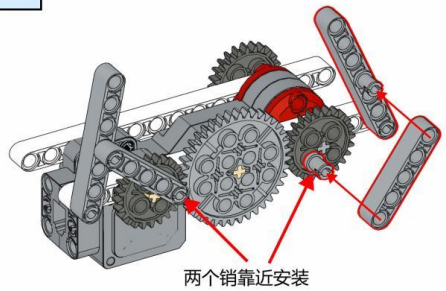

Mounting the bull's foot

Build a robot

7

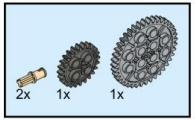

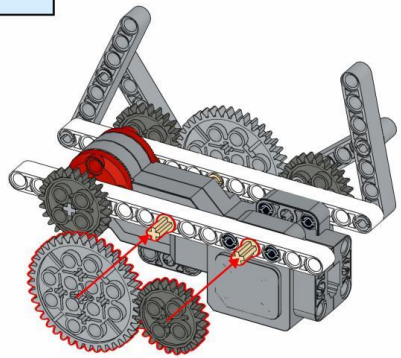

8

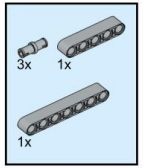

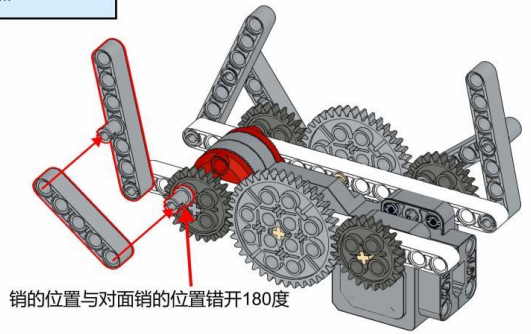

Build a robot

9

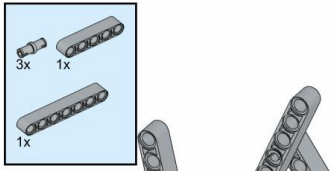

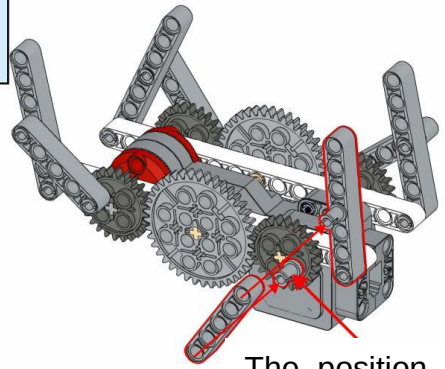

The position of the peg should be staggered 180 degrees from the position of the opposite peg.

10

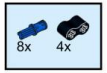

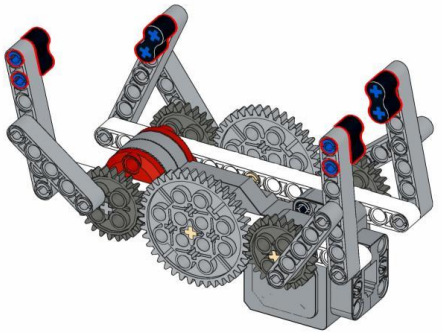

Build a robot

11

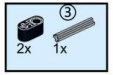

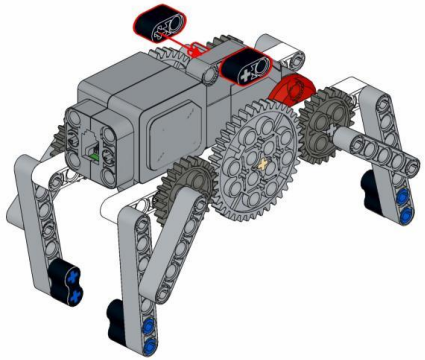

12

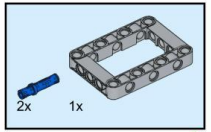

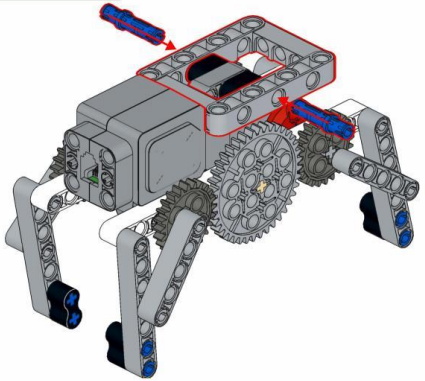

Build a robot

13

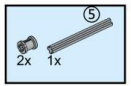

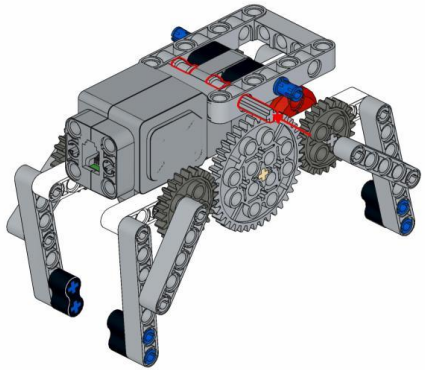

14

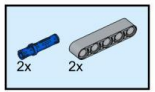

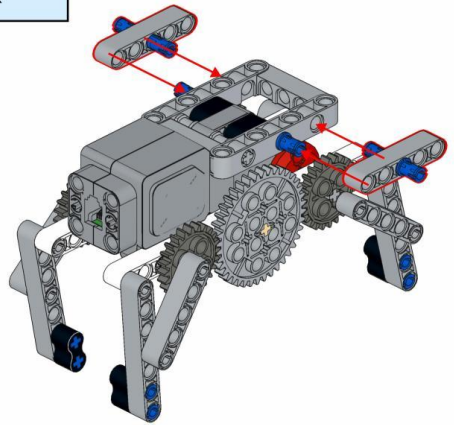

Build a robot

15

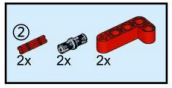

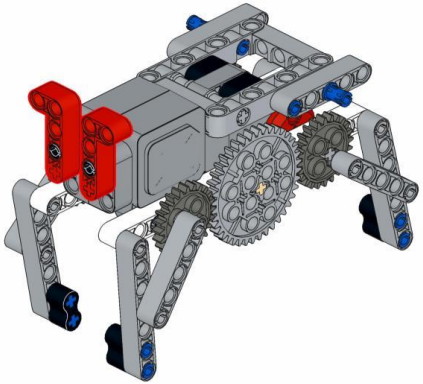

16

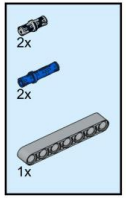

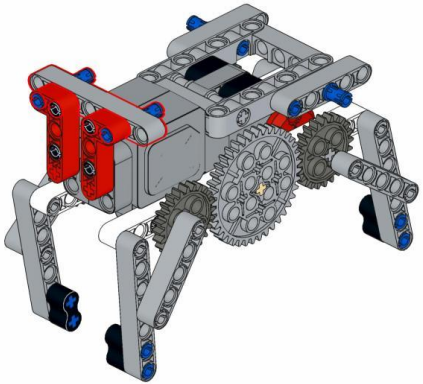

Build a robot

17

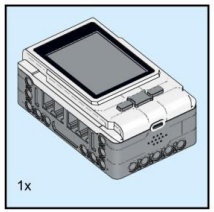

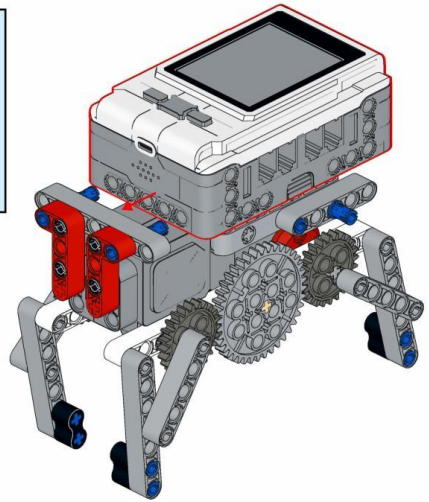

18

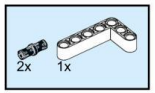

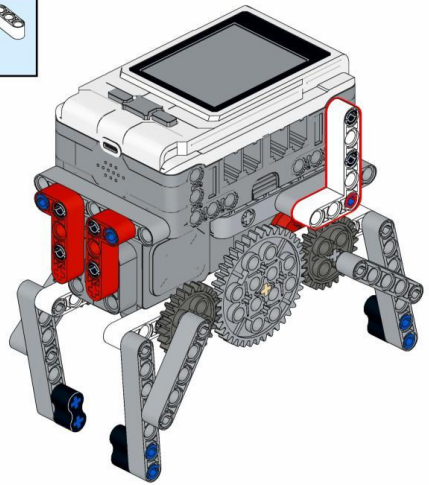

Install the controller

Build a robot

19

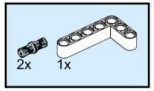

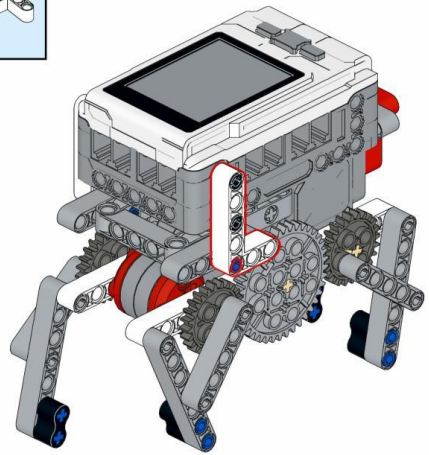

20

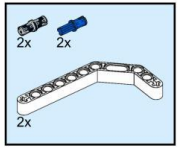

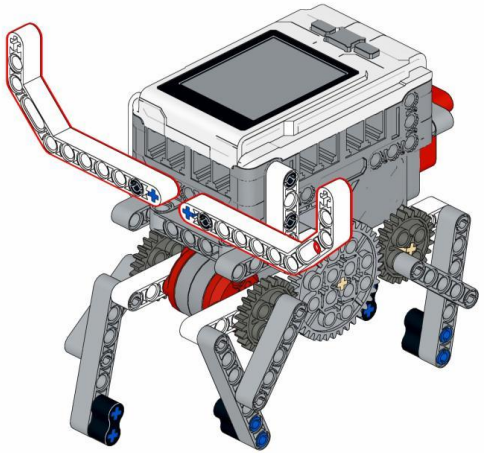

Build a robot

21

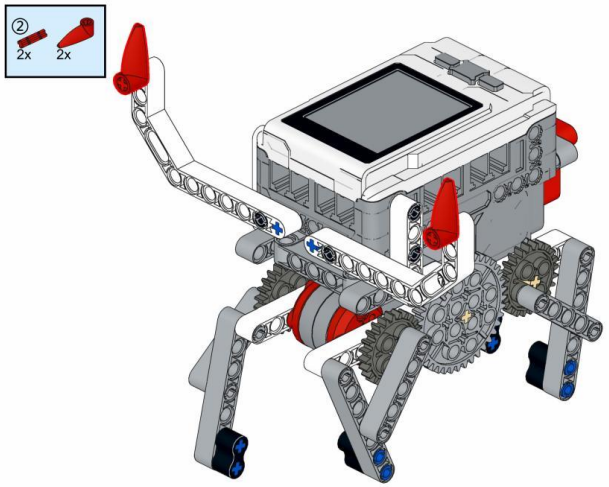

22

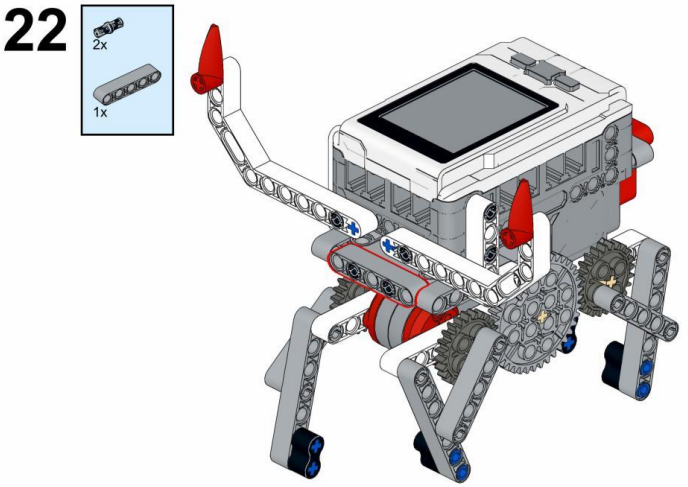

Build a robot

23

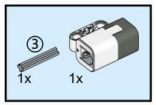

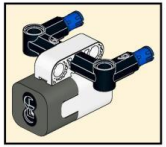



24

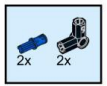



Build the head assembly (color sensor)

Build a robot

25

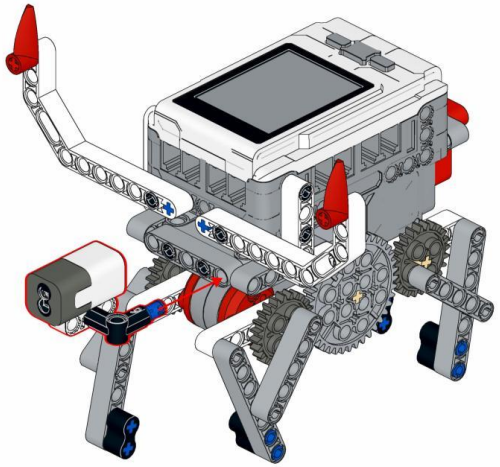

26

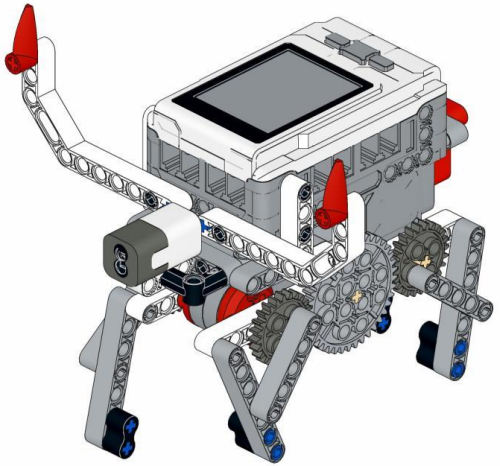

Build the head assembly

Hardware Connection

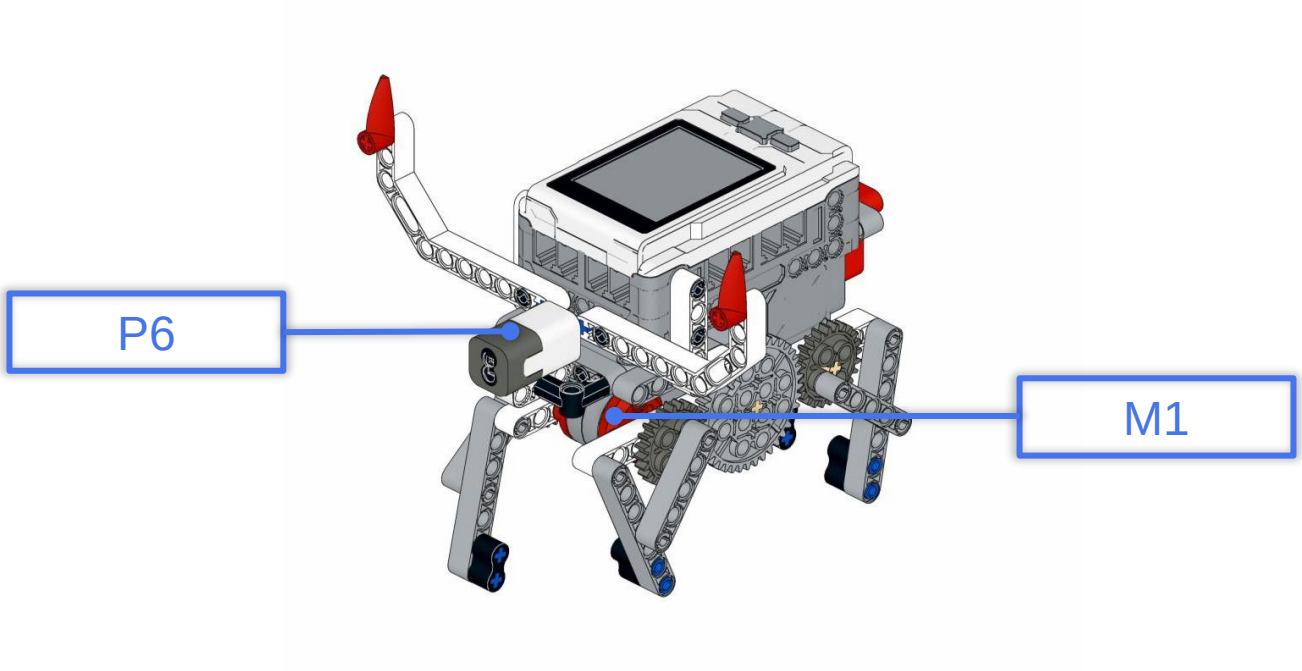

“

How do we achieve the required functions?

”

Rules for naming variables

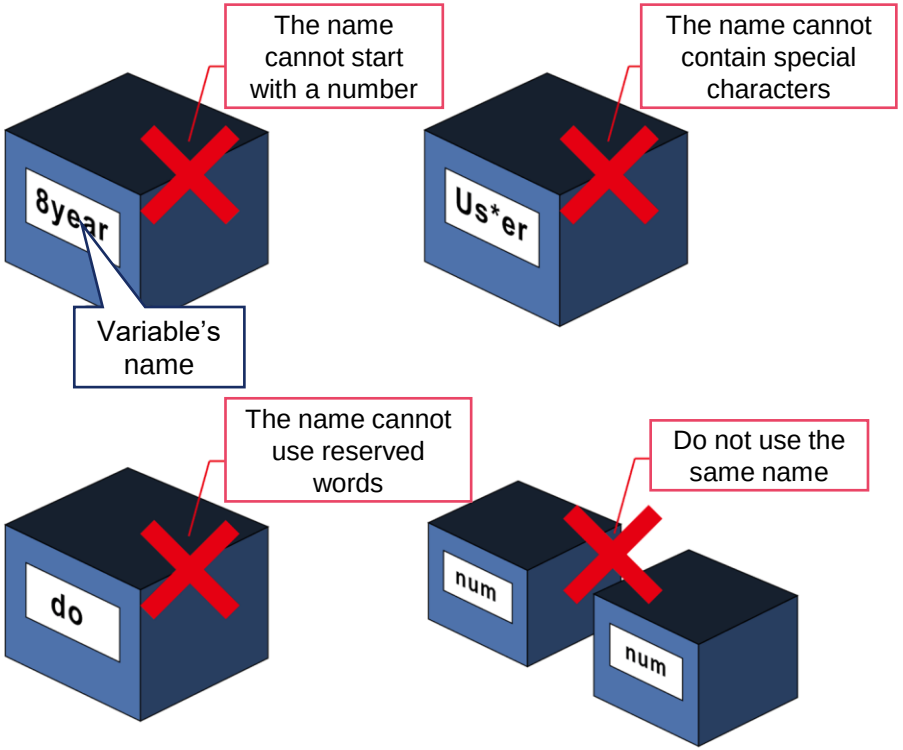

The names of variables need to distinguish between uppercase and lowercase letters, so B and b represent different variables.

Variable names can only consist of Chinese characters, letters, numbers, and underscores, and cannot start with a number or contain special characters.

Coding block – change variable by ( )

This block increases the specified variable by a fixed value, defined by the user.

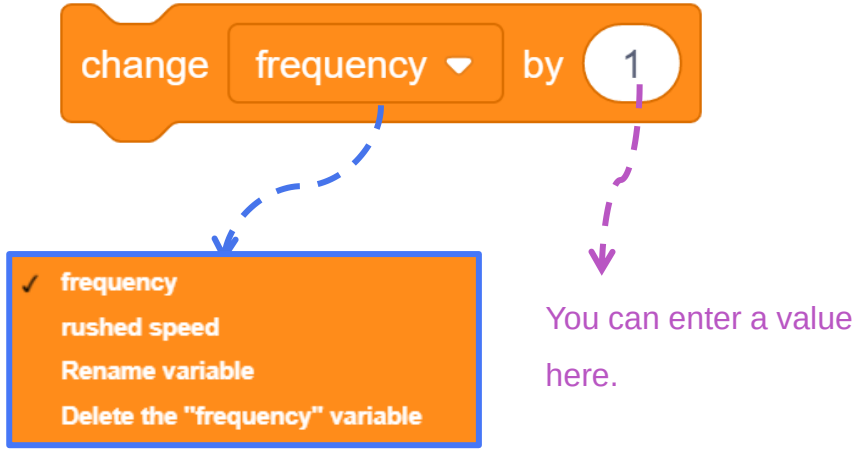

Example of using variable increment



If you press the left button, the variable “frequency” value will increase by 1 and be displayed on the screen.

Download the program and run the test



Program Flow Chart

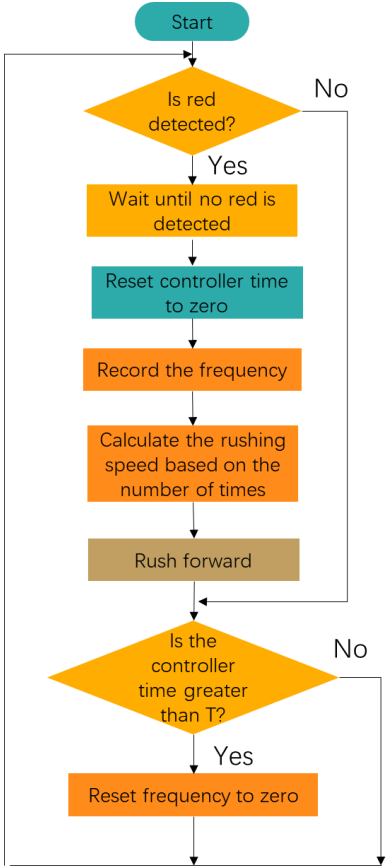

After the program starts, if red is detected, wait until no red is detected, then reset the controller time to zero, record the number of times, calculate the rushing speed based on the number of times, and make the bull rush forward.

If the controller time is greater than T (set time), reset the number of times to zero.

1. Increase the number of times when detecting color changes

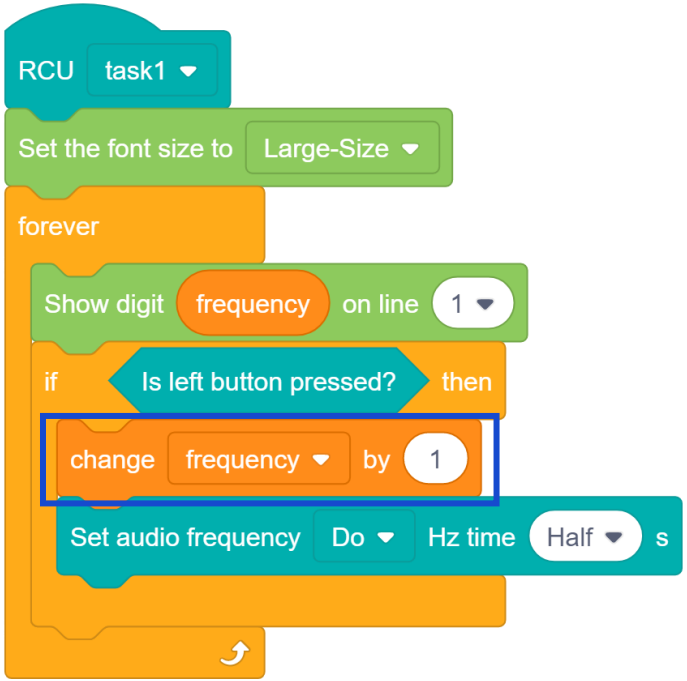

The program starts and sets a large font. In the loop, the screen displays the value of the variable "frequency". If red is detected, it waits until black is detected (black is the default if no object is approaching), then the controller time is reset to zero, the value of the variable "frequency" is increased by 1, and the buzzer sounds once.

2. Calculate the rushing speed and then rush forward

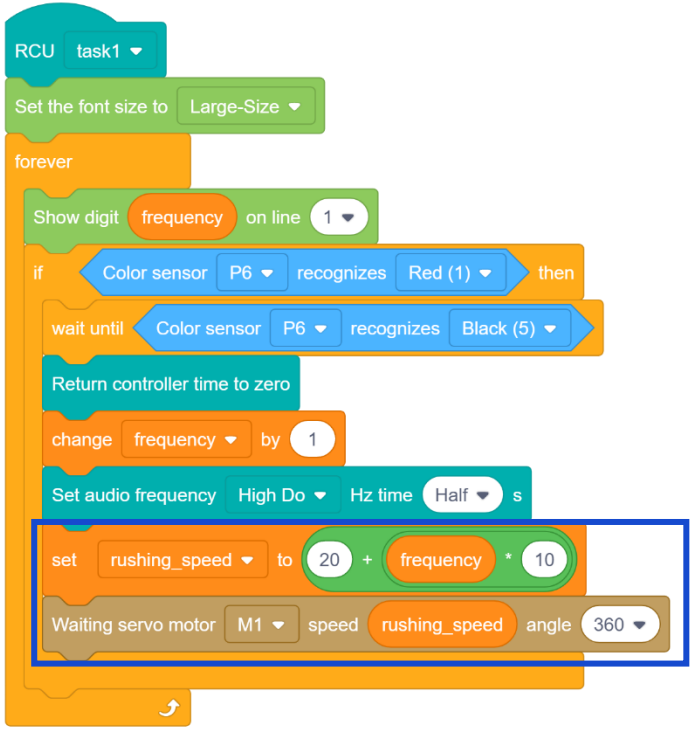

Set the "rushing speed" to "20 + frequency * 10" (the minimum speed that can make the bull walk is 20), and then wait for the motor to rotate at a certain angle at the "rushing speed" (you can set it yourself).

3. If no trigger for a while, the frequency will reset to 0

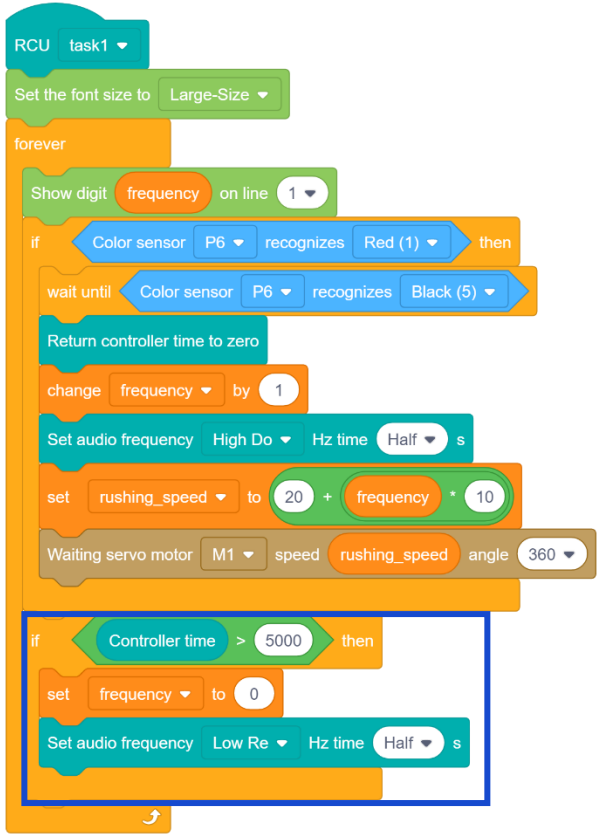

If the controller time is greater than the specified value, the value of the variable "frequency" is set to 0 and the buzzer sounds (add sound reminders based on actual conditions).

Expansion Tasks

Every once in a while, the frequency decreases by 1.

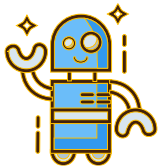

Expansion Program

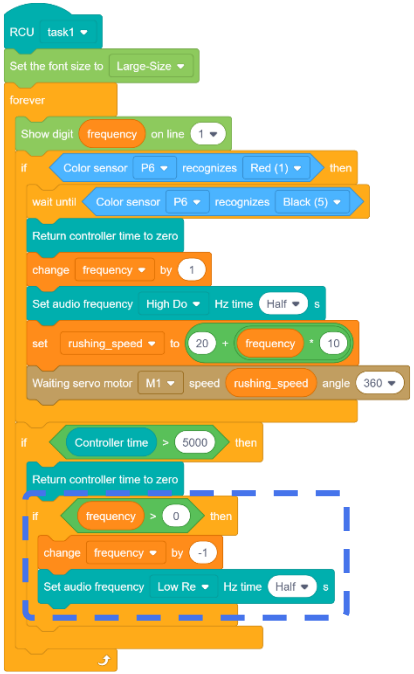

If the value of the variable "frequency" is greater than 0, increase it by -1 (decrease it by 1).

Quiz

Single-choice question

Regarding variables, the following description is incorrect ( )

A. The name cannot start with a number

B. You can select a specific variable to modify the value

C. You can store characters

D. The variable "E" and the variable "e" are the same variable

Answer: D

Further Reading



Spanish bullfighting originated from ancient Spanish religious activities (killing bulls as sacrifices to the gods). In the 13th century, King Alfonso X of Spain started this kind of worship activity, which later evolved into bull racing performances (real bullfighting performances appeared in the mid-18th century). It is mainly popular in Spain, Portugal and Latin America, and is also the national sport of Spain. The history of bullfighting can be traced back to the worship of bulls and murals in prehistoric times.

Further Reading



Most people think that bulls are enraged because they see red cloth. In fact, the bulls used in bullfighting are violent North African bulls, and these bulls are color blind and have no sense of any color. Only shaking objects can arouse their fighting spirit. As for using red cloth to enrage bulls and using yellow cloth to calm bulls, it is an unverified rumor. The red cloth is used only to allow the audience to see the bullfighting performance more clearly, make the audience more excited and involved, and add more drama to the performance of the bullfighter and the bull.

Thanks!