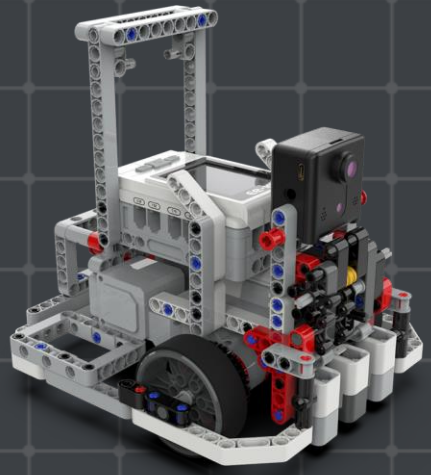

Lesson 15 | Safe |

Key points from this lesson:

1. Understand the meaning of the values returned by the color sensor

2. Learn to write simple programs that use color to control the operation of equipment

Possible difficulties from this lesson:

1. Learn to distinguish between color sensors and photoelectric sensors

2. Understand the impact of color difference and distance on the recognition results of color sensors

Safe

A safe, also called a safe deposit box, is a box that can be used to protect valuables. It has a thick door and a solid shell. To open the door, you need to use a key or enter a password. This can prevent the items inside from being stolen or damaged.



Types of door locks for safes

There are many types of safes, and their door locks are also different. Common ones are mechanical, digital, card swipe, and fingerprint.



Mechanical safe



Digital safe



Card swiping safe



Fingerprint safe

Effect Demonstration

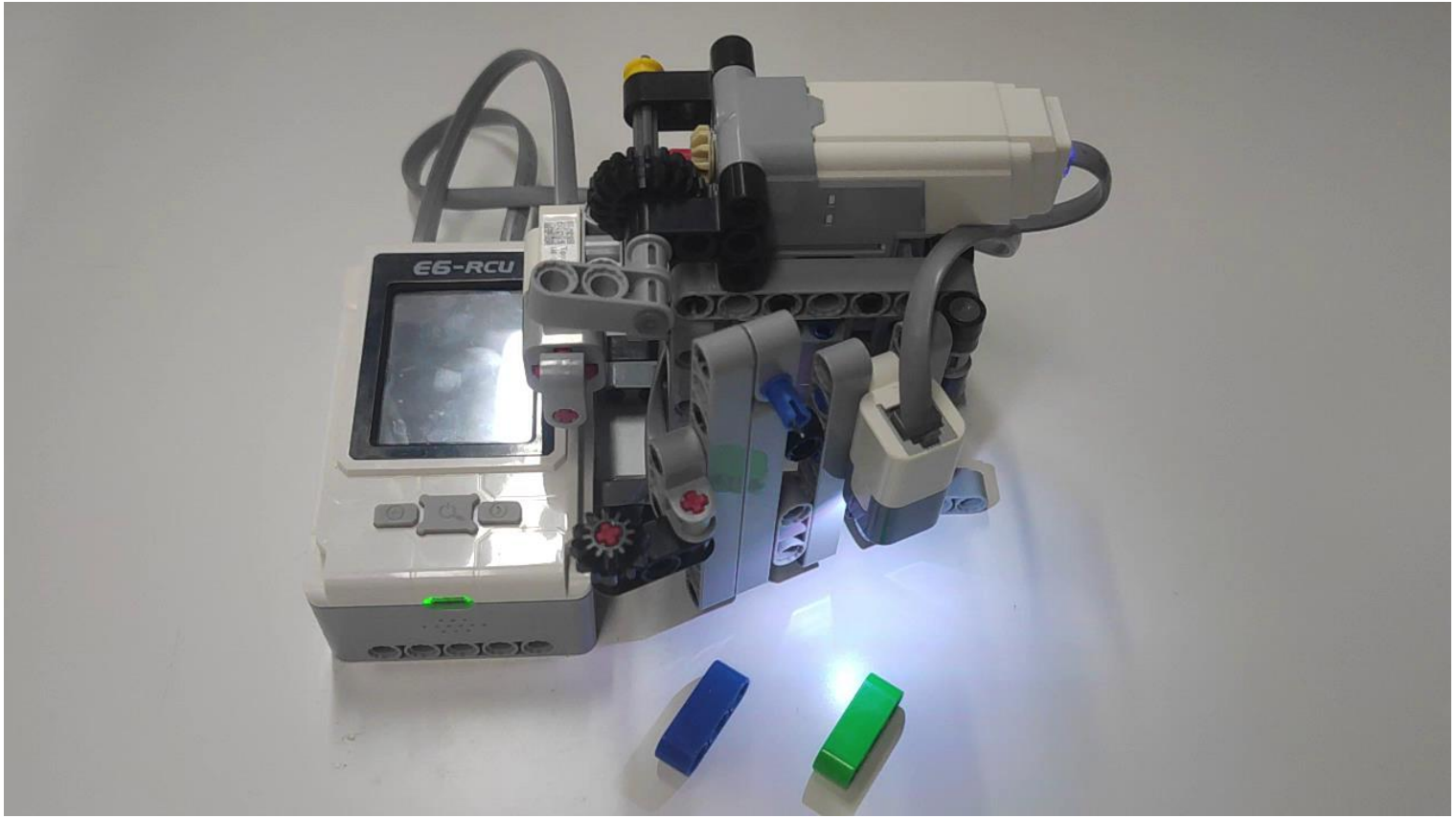

Project Tasks

Design a safe model that uses a color sensor to control the unlocking.

Requirements for robot functions:

1. When the door is closed, press the left button to lock it.

2. The door will be unlocked only when the color sensor recognizes green (password).

Color Sensor

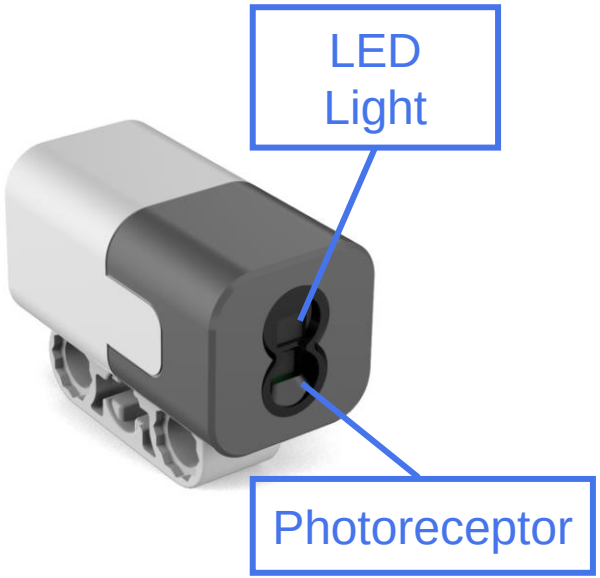

The color sensor is used for color detection. It can identify 6 fixed colors: red, green, blue, yellow, black, and white, and return the corresponding values.

Unlike photoelectric sensors, color sensors detect the color of light reflected from the surface of an object.

Connecting to the controller

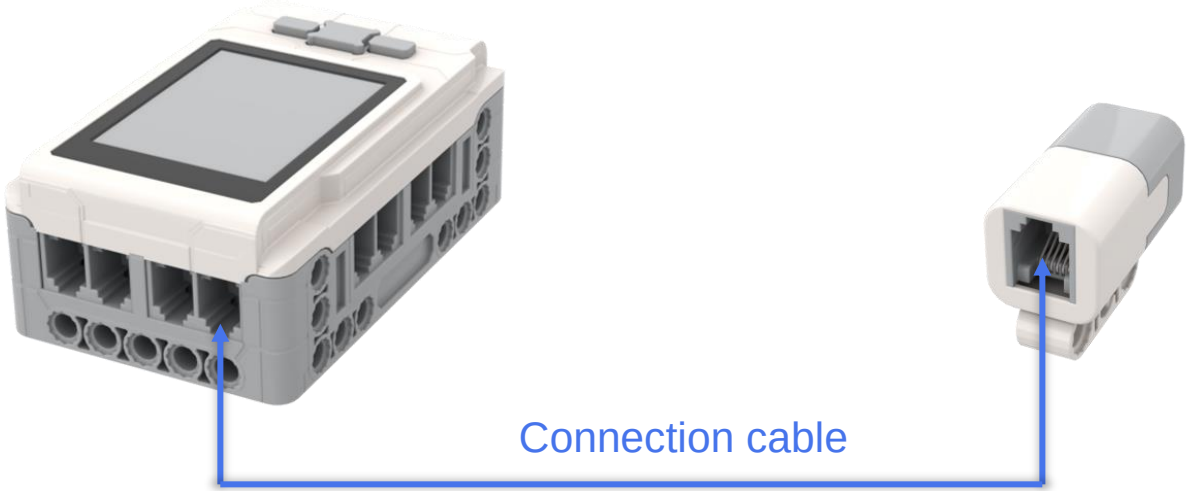

The color sensor can be connected to any composite port (P1-P8) of the controller, such as the P1 port.

Test - Color

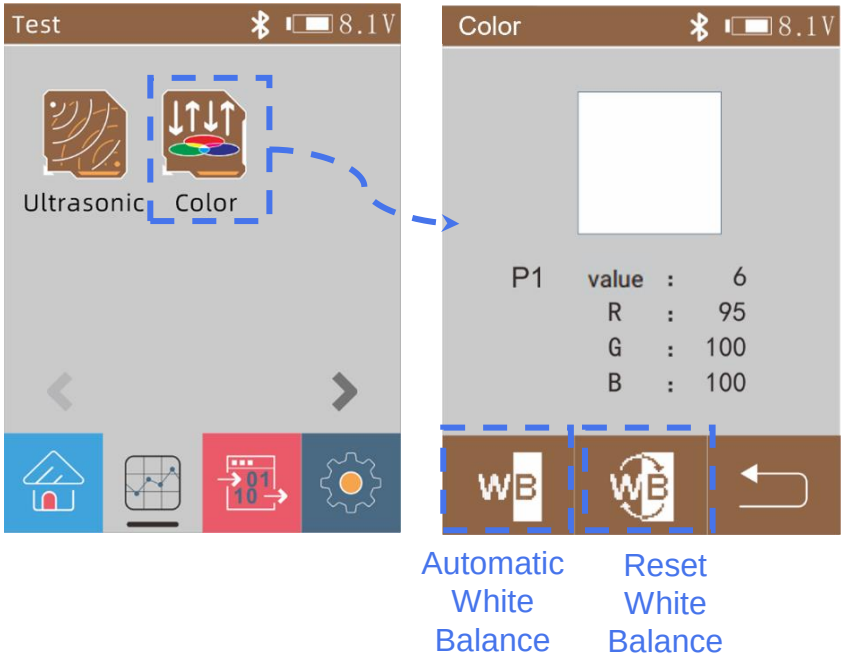

In the built-in test interface of the controller, click "Color" to enter the color sensor test interface.

Use blocks of different colors to approach the probe of the color sensor and observe the change pattern of the returned color and value. If the recognition result is inaccurate, you can click the "Reset White Balance" button.

Build a robot

1

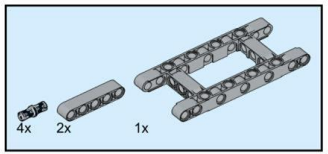

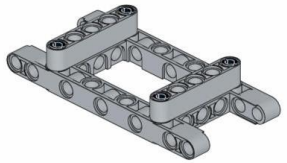

2

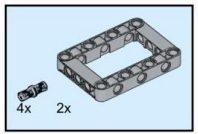

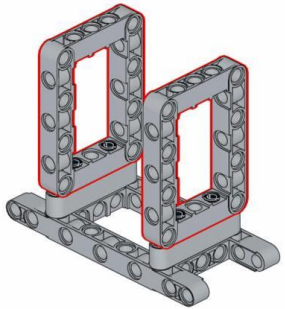

Assemble the box

Build a robot

3

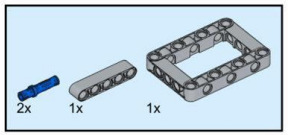

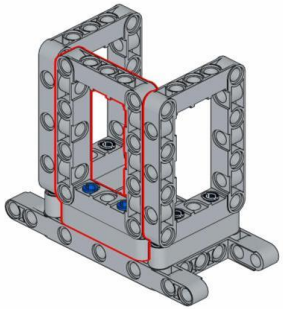

4

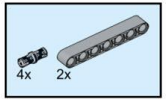

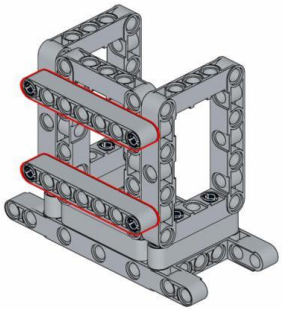

Build a robot

5

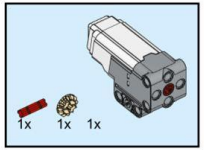

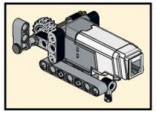

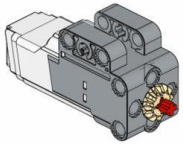

6

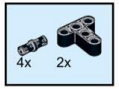

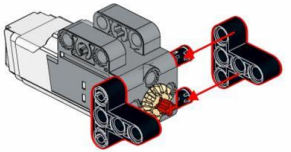

Assemble the lock of the safe

Build a robot

7

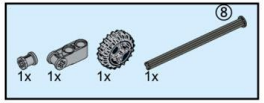

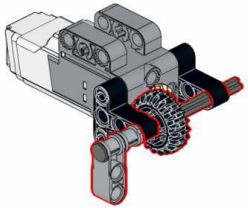

8

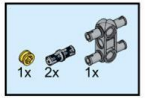

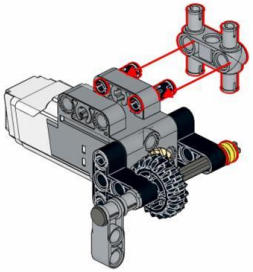

Build a robot

9

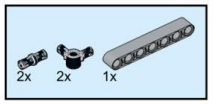

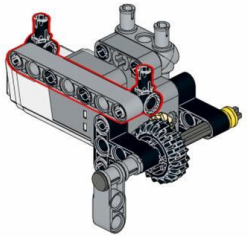

10

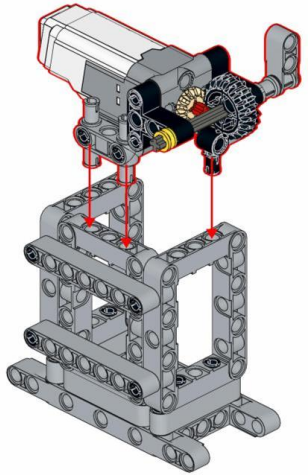

Build a robot

11

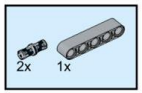

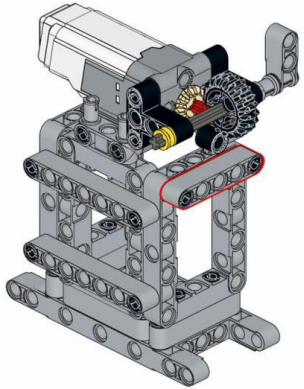

12

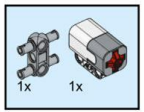

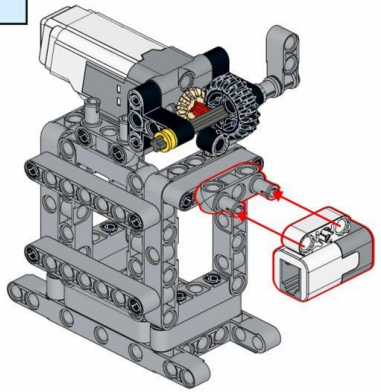

Install the touch sensor

Build a robot

13

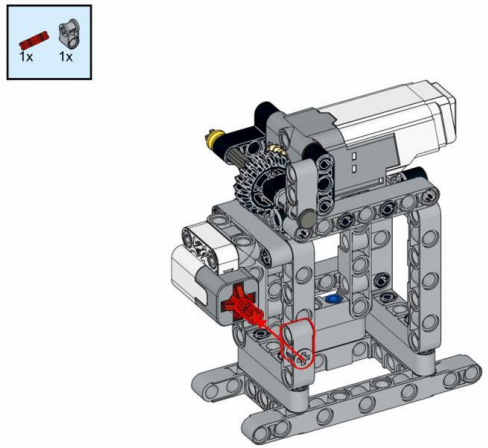

14



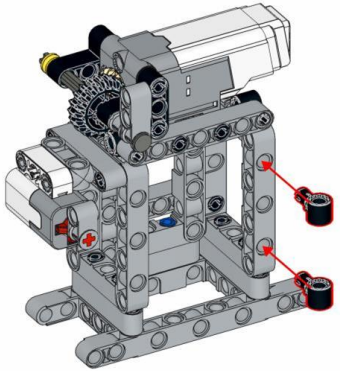

Build a robot

15

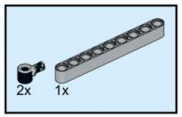



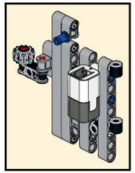

16

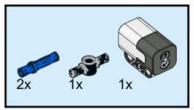

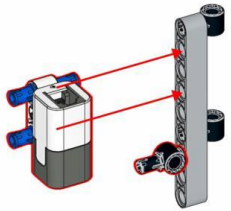

Install the color sensor

Build a robot

17

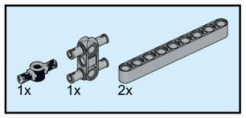

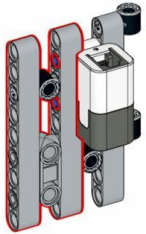

18

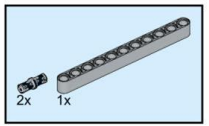

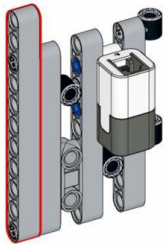

Build a robot

19

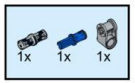

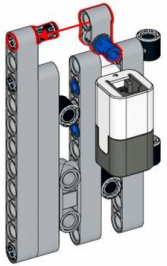

20

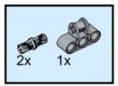

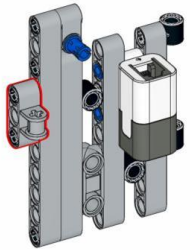

Build a robot

21

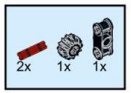

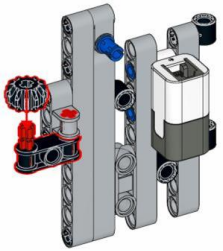

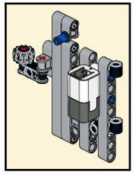

22

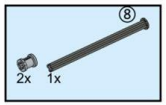

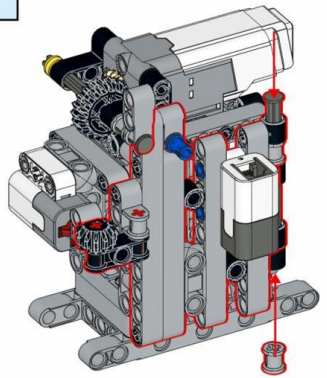

Build a robot

23

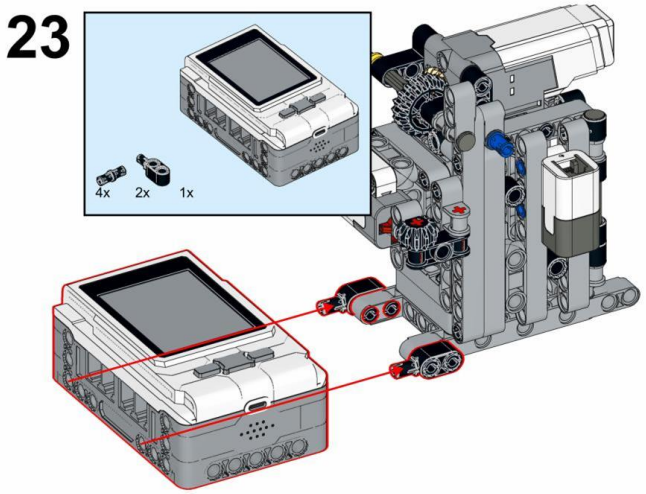

24

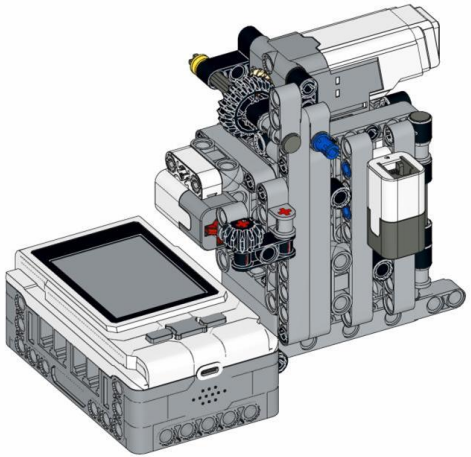

Install the controller

Hardware Connection

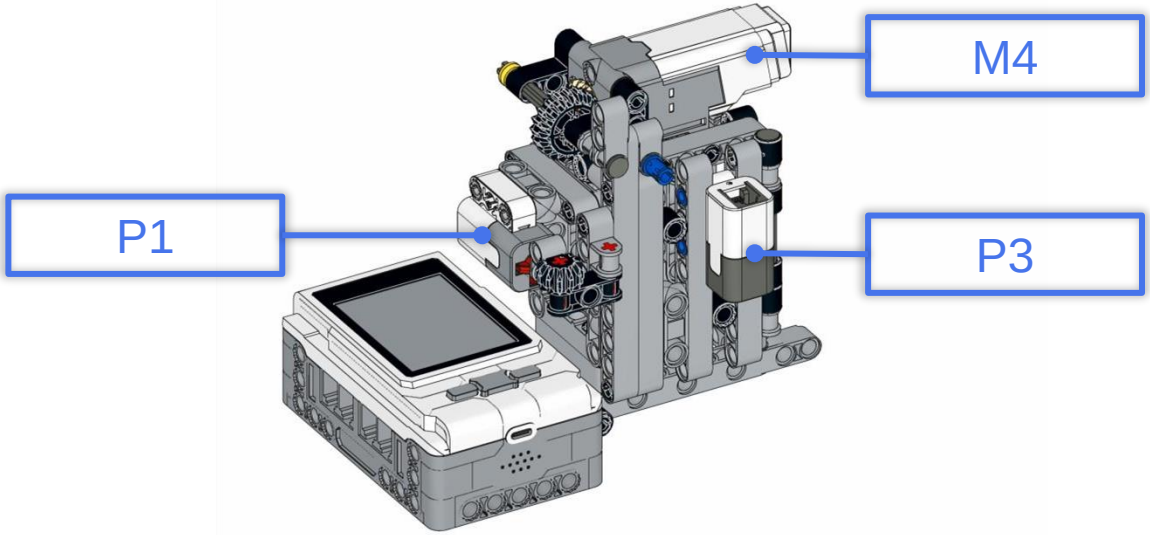

How to use color recognition to unlock?

Coding Block – Color sensor recognition

This block can determine whether the recognized color is the specified color.

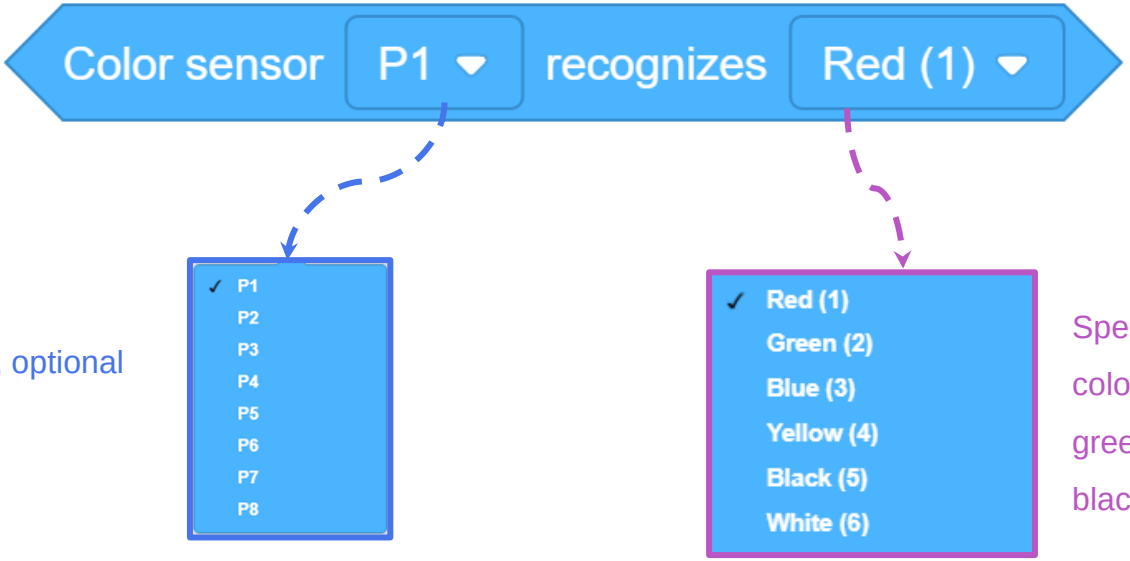

Composite port, optional "P1-P8"

Specified color, 6 colors available: red, green, blue, yellow, black, white

1. The safe door can only be locked when it is closed

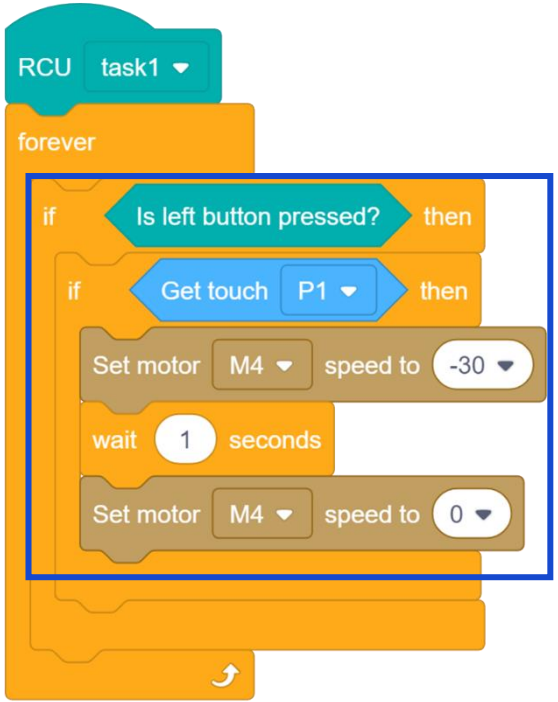

If the left button is pressed, it will continue to determine whether the touch sensor is pressed. The motor will rotate to complete the locking if the condition is met.

If I detect the state of the touch sensor first and then the left button, will the program effect be the same?



2. Unlock when green is recognized

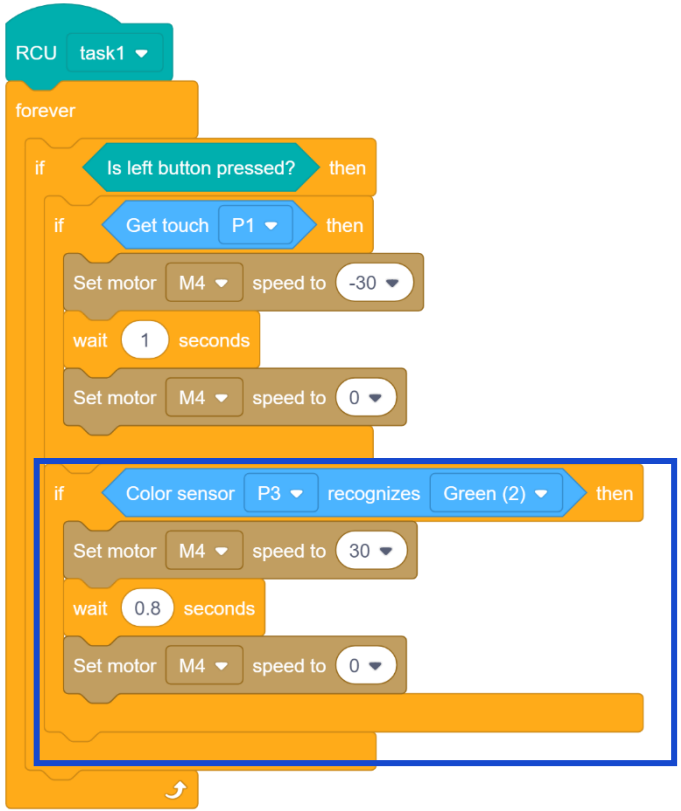

If green is recognized, the motor turns to unlock.

3. Add sound prompts

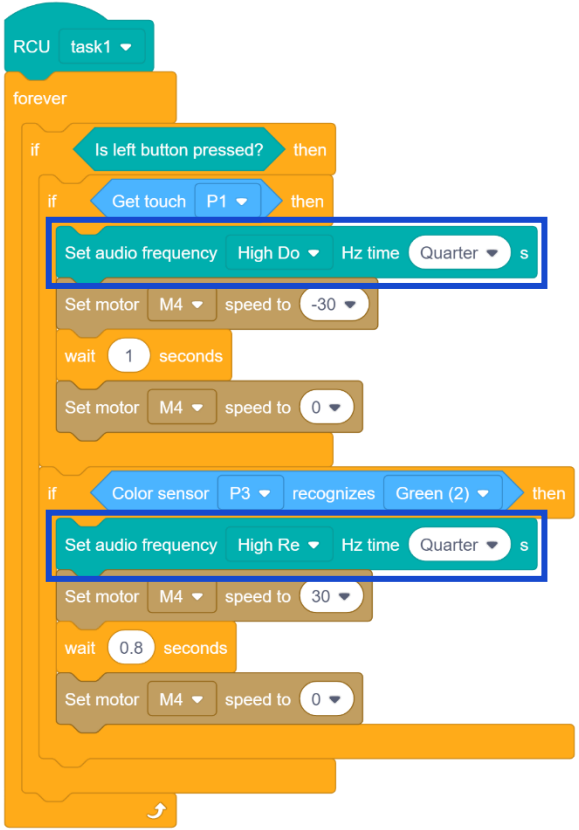

The buzzer sounds once before locking or unlocking.

Expansion Tasks

You can unlock the safe only after the color sensor recognizes two colors in a row.



Expansion Program

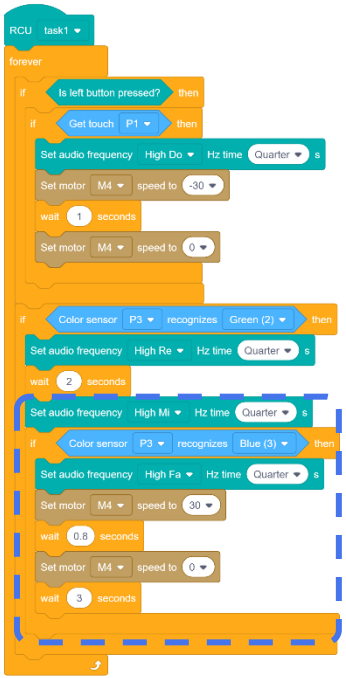

After recognizing green, wait for 2 seconds and then detect blue, and unlock it only when the conditions are met.

Quiz

Single-choice question

Which of the following descriptions about the color sensor is incorrect? ( )

A. It can identify 6 fixed colors

B. The larger the value returned, the darker the color

C. The object to be detected needs to be within a certain distance

D. The probe is equipped with an LED light

Answer: B

Further Reading



The types of safes can be classified according to their functions, uses, installation methods and other factors.

According to the functions, safes can be divided into anti-theft safes, fireproof safes, fireproof and anti-theft safes, anti-magnetic safes, moisture-proof safes, etc.

According to the use, safes can be divided into safes for various purposes such as home, commercial, financial, hotel, firearms, and cash registers.

Further Reading



According to the installation method, safes can be divided into floor-mounted, embedded, wall-mounted, fixed, and non-fixed types.

According to the anti-theft ability, safes can be divided into six types of anti-theft safes: A1, A2, B1, B2, B3, and C, and five types of fireproof safes: 30 minutes, 1 hour, 2 hours, 4 hours, and storage media.

Thanks!