Learning Series
Mechanical dog



This robotics kit is a building block programming robot research and development by Joinmax.

The kit is equipped with various sensors such as sound sensitivity, color sensor, touch sensor, photoelectric sensor, color light, ultrasonic, camera and many building blocks parts. Students can build various building block robots with their imagination, and use graphical programming software to program the robot and experience the joy of hands-on creation.

Learning Target

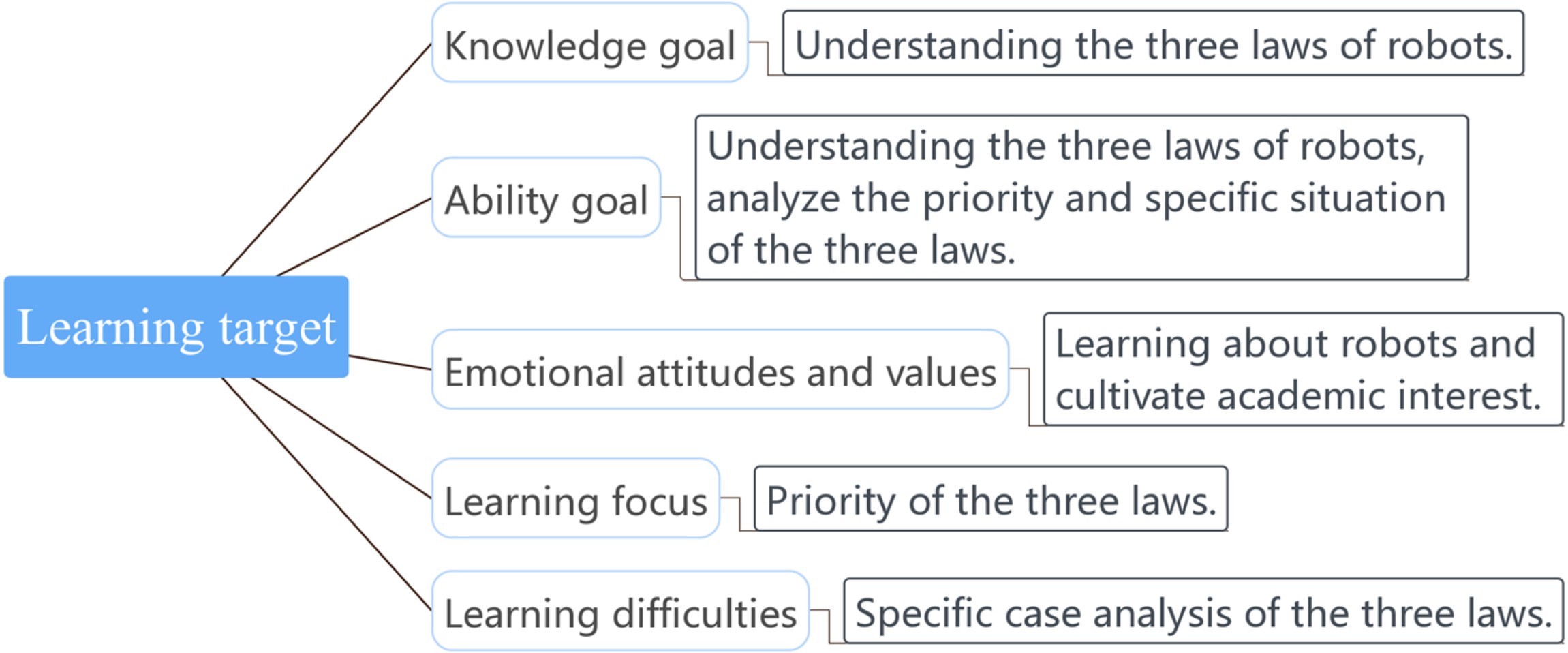

Contents

1 Course introduction

2 Teaching new knowledge

3 Task practice

4 Test effect

Course Introduction



Course Introduction





Question 1: What is the rule? What will be happened if there is no rule in human society? Does the robot need rules to limit it?

Question 2: What do you think is the most important feature of a robot?

No rules are not square, the most important thing for robots is not to hurt humans!

Obey the rules so that our life has rules to follow, so that the whole society is in order, everyone is in harmony, everything will be in order. If someone does not follow the rules, then our normal life cannot be guaranteed.

Brainstorm time : What will be happened if there is no traffic light in our lives?

Being late; traffic jam; car accident, etc.

the robot must not hurt humans, must obey the rules, the implementation has been set, the rules and regulations, the robot must not take part in the design of the robot.

Course Introduction

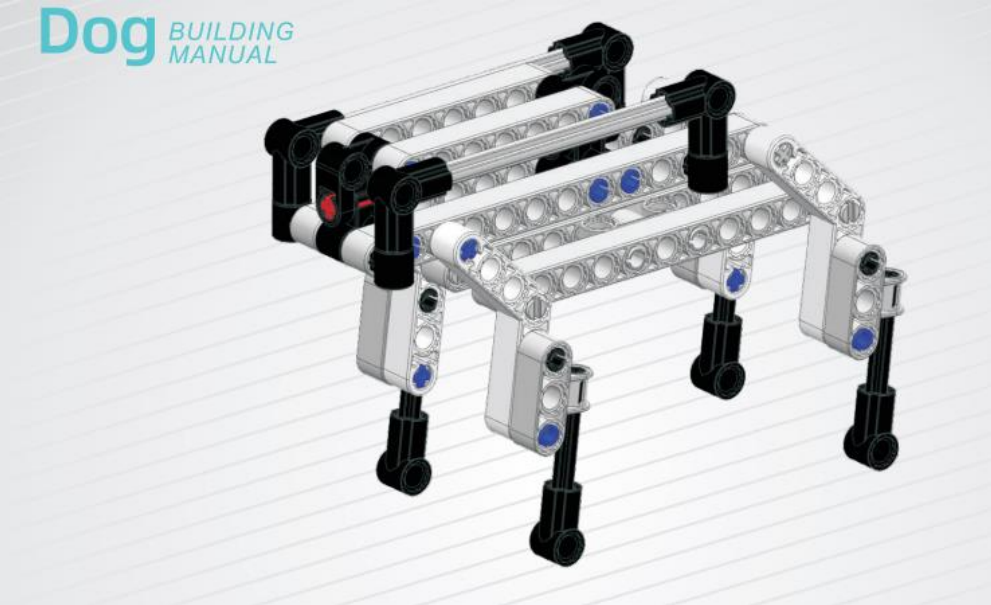

Know the mechanical dog

Part cognition is the foundation and the most basic knowledge of classroom communication.Practice makes perfect the need for constant memory and use, in order to lay the foundation to improve the ability.

Today we are going to learn a mechanical dog. It consists of four legs, a head and a body. It is an animal robot. It is a kind of bionic robot. It has a strong four-legged and can smoothly transport materials to us.

Teaching New Knowledge



Teaching New Knowledge

Source of the three laws of robots

Asimov's "I, Robot" was published by Gnome Press in the late 1950s.

Although this book is an "old manuscript", these short stories were published in the past ten years. This time, the book was published, which made readers appreciate the charm of Asimov robotic science fiction for the first time. Asimov wrote a new "Introduction" for this book, and the subtitle of "Introduction" is "The Three Laws of Robotics", putting the "Three Principles of Robotics" in the most prominent and most awake place.

The mutual restraint between the three laws has certain guiding significance for the creation of later generations.

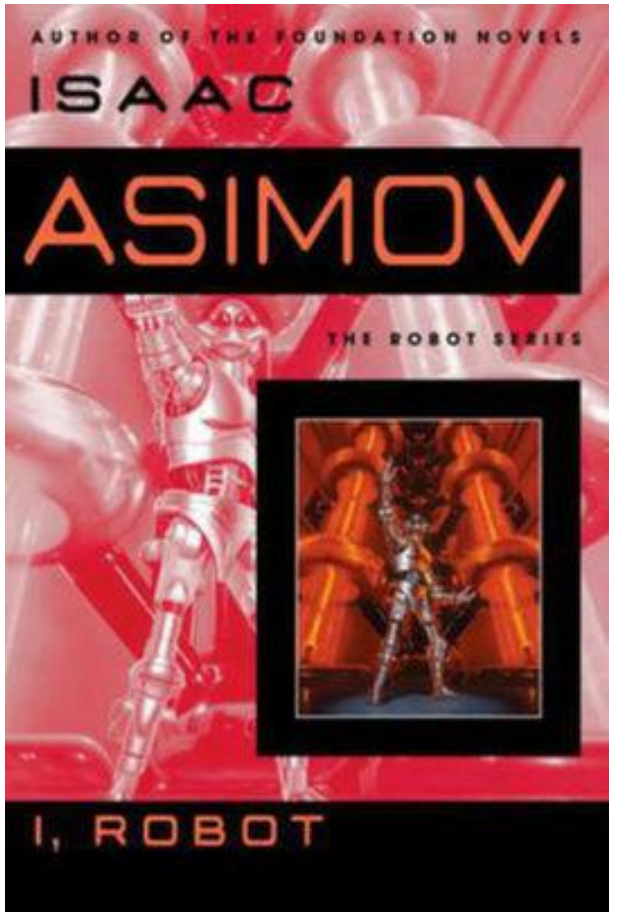

Teaching New Knowledge

Three laws of robots

① The first law: robots must not harm human individuals, or witness human beings will be in danger and not protect them

② The second law: the robot must obey the command given by the person, when the order conflicts with the first law

③ The third law: the robot should protect its survival as much as possible without violating the first and second laws.

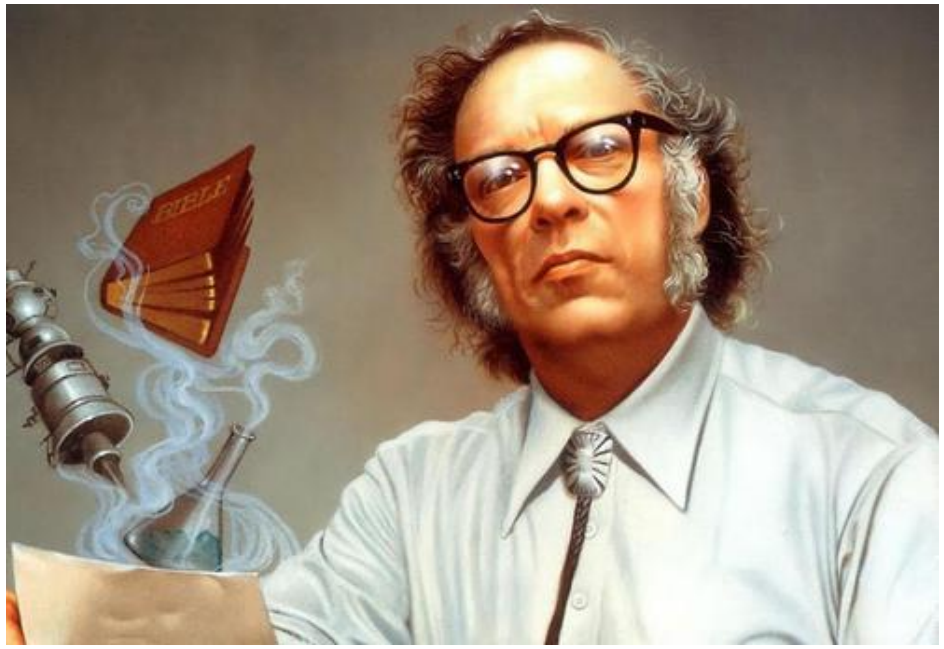

Task Practice



Task Practice

1

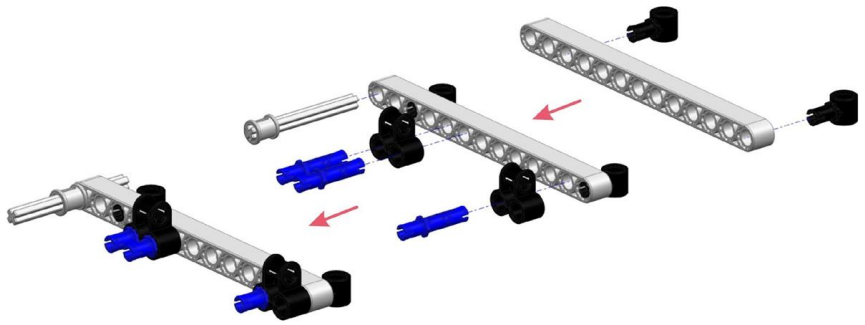

ZMROBO 中鸣机器人

2

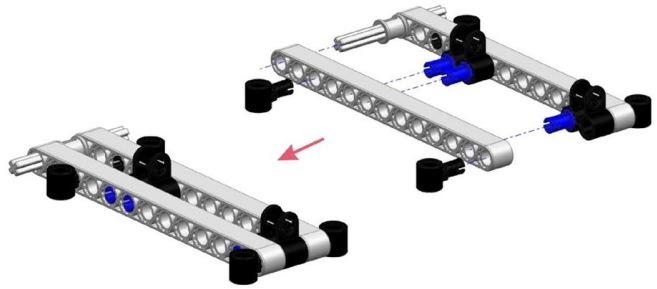

ZMROBO 中鸣机器人

Task Practice

3

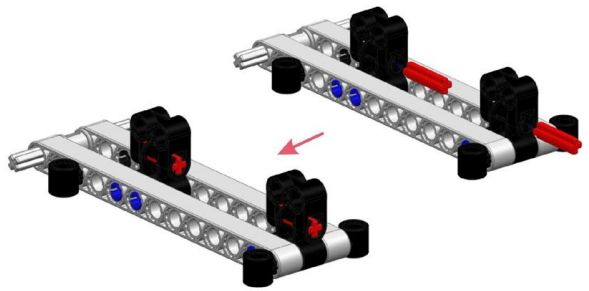

ZMROBO 中鸣机器人

4

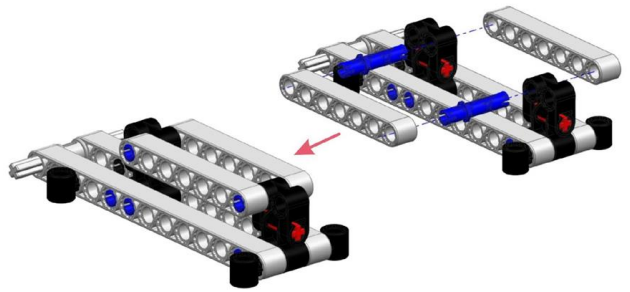

ZMROBO 中鸣机器人

Task Practice

5

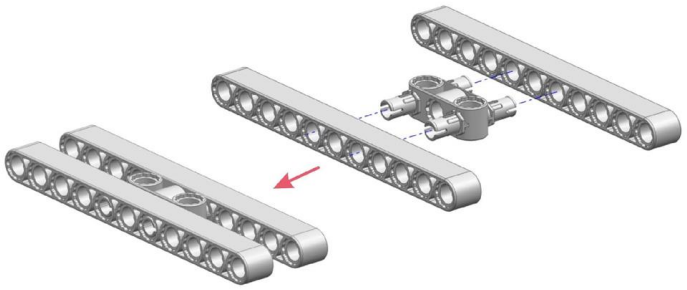

ZMROBO 中鸣机器人

6

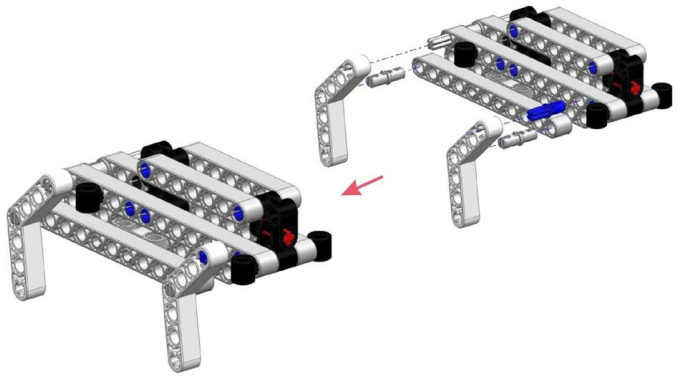

ZMROBO 中鸣机器人

Task Practice

7

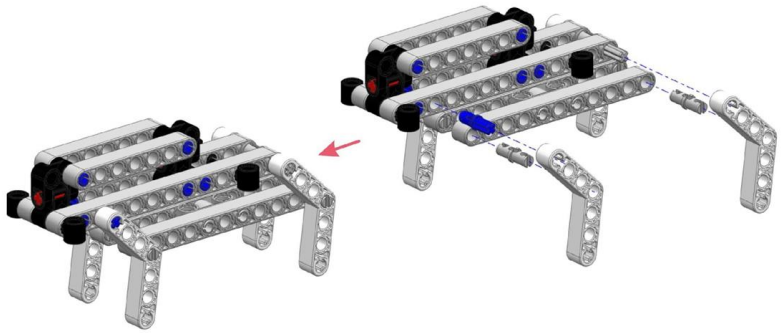

ZMROBO 中鸣机器人

8

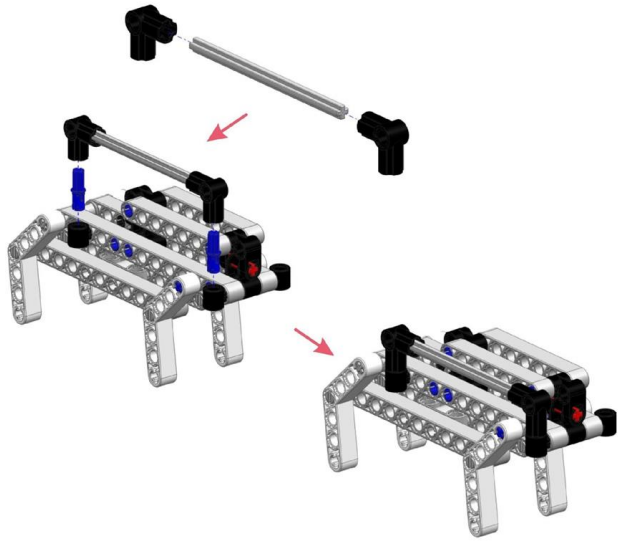

ZMROBO 中鸣机器人

Task Practice

9

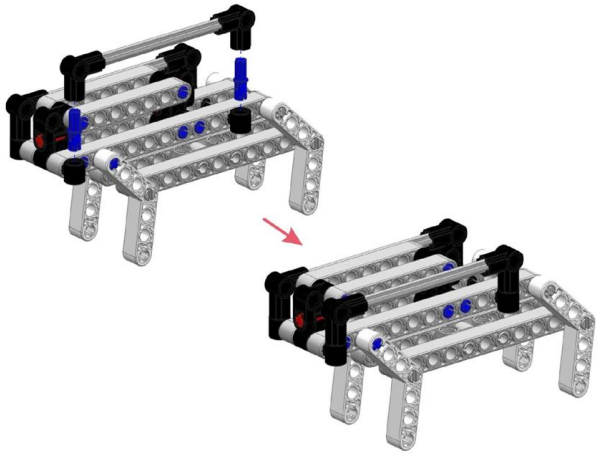

ZMROBO 中鸣机器人

10

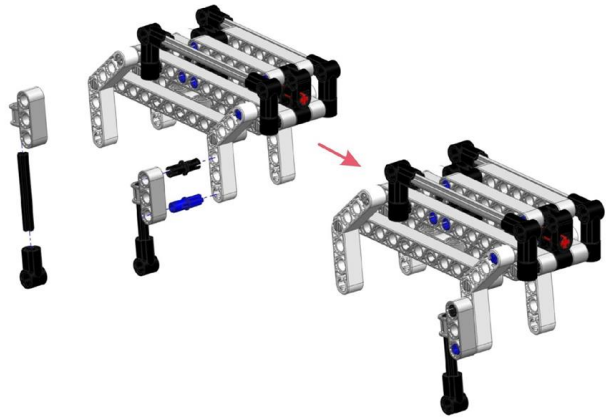

ZMROBO 中鸣机器人

Task Practice

11

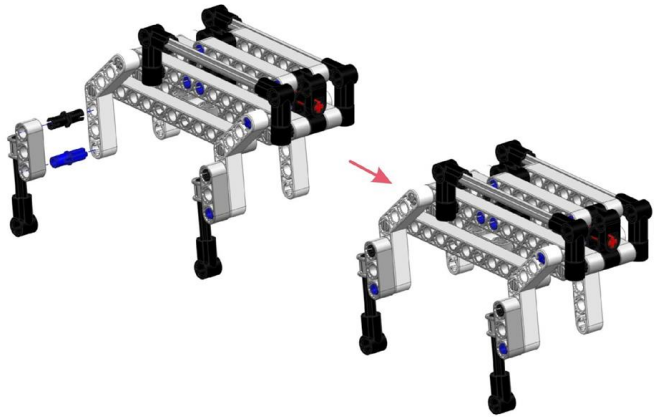

ZMROBO 中鸣机器人

12

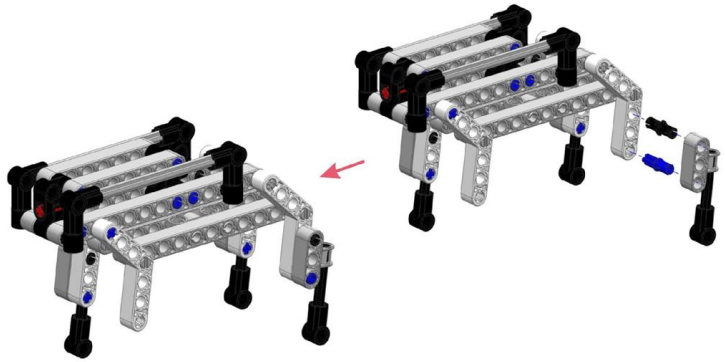

ZMROBO 中鸣机器人

Task Practice

13

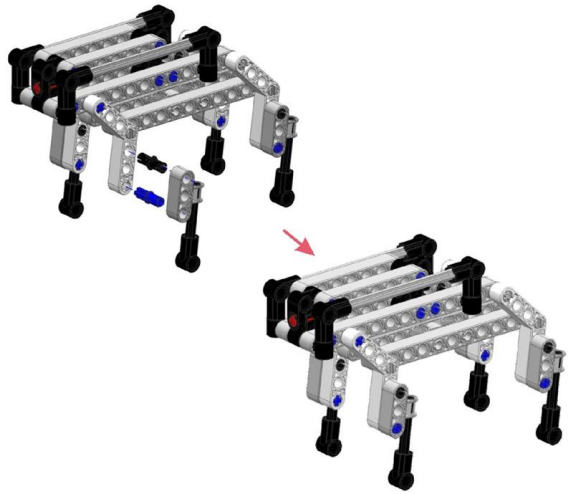

ZMROBO 中鸣机器人

13

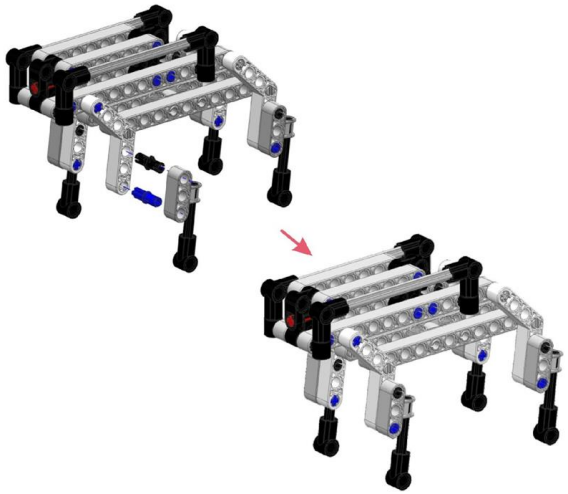

ZMROBO 中鸣机器人

Task Practice

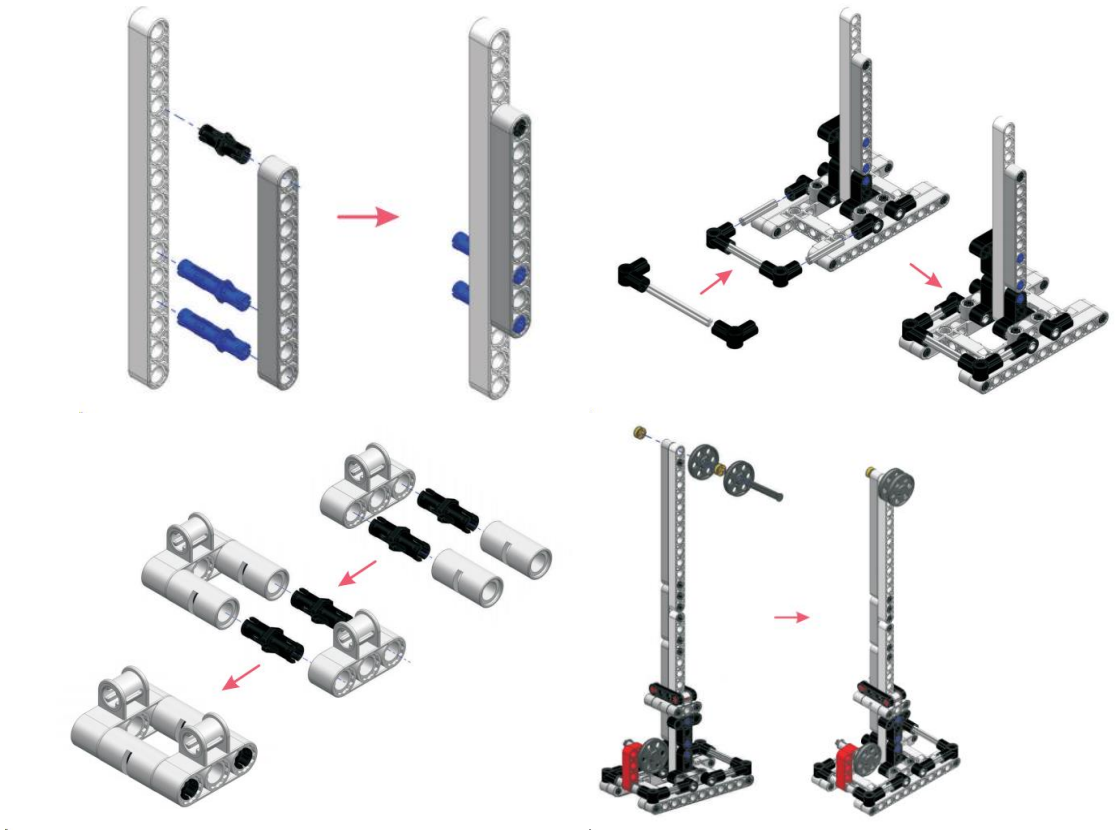

Assembly requirements

①stable structure

②focus is right

③shape match

Checking Effect



Test Effect



Reviewing the learning content and deepen the impression.

Question 1

What is the name of the robot made today?

Question 2

What materials are used in today's robots?

Question 3

Can the robot's four feet be active?
How to improve?

Test Effect

Homework



①Complete a role-playing, starting with the use of mechanical dog and understanding the classroom requirements.

②Using the three laws of today to design a device for the mechanical dog robot made today, and share with each other that this is based on which law to create. What is the function?

③When you introduce yourself, you have to say hello to everyone, and you should listen carefully when others introduction. Applause at the end of the introduction and reply “It’s really good!”

Thank you for watching

BE STEM READY

