BE STEM READY

Robotics Learning Series

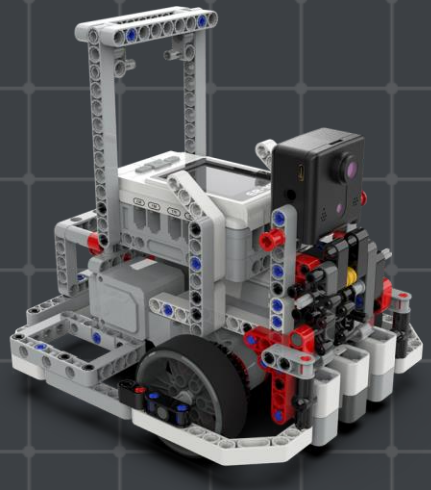

Lesson 4 | Gorilla |

Key points from this lesson:

1. Learn to write programs that allow multiple sensors to control electronic components
2. Be proficient in programming to control the motor to rotate to a specified angle

Possible difficulties from this lesson:

1. Learn to select the appropriate sensor according to functional requirements
2. Master the use of blocking function or blocking-type motor modules according to actual tests

Gorilla

There is an animal that looks like a human being, they are called "gorillas". Gorillas have black hair and flexible bodies, their faces are a bit like human faces, and some have long tails.





Gorillas' habits



Gorillas have strong limbs and flexible fingers, which allow them to climb trees easily. Their IQ is equivalent to that of a person between three and five years old.

They like to eat fruits, such as bananas and mangoes, as well as some plant foods such as leaves, flowers, and bark.

Effect Demonstration

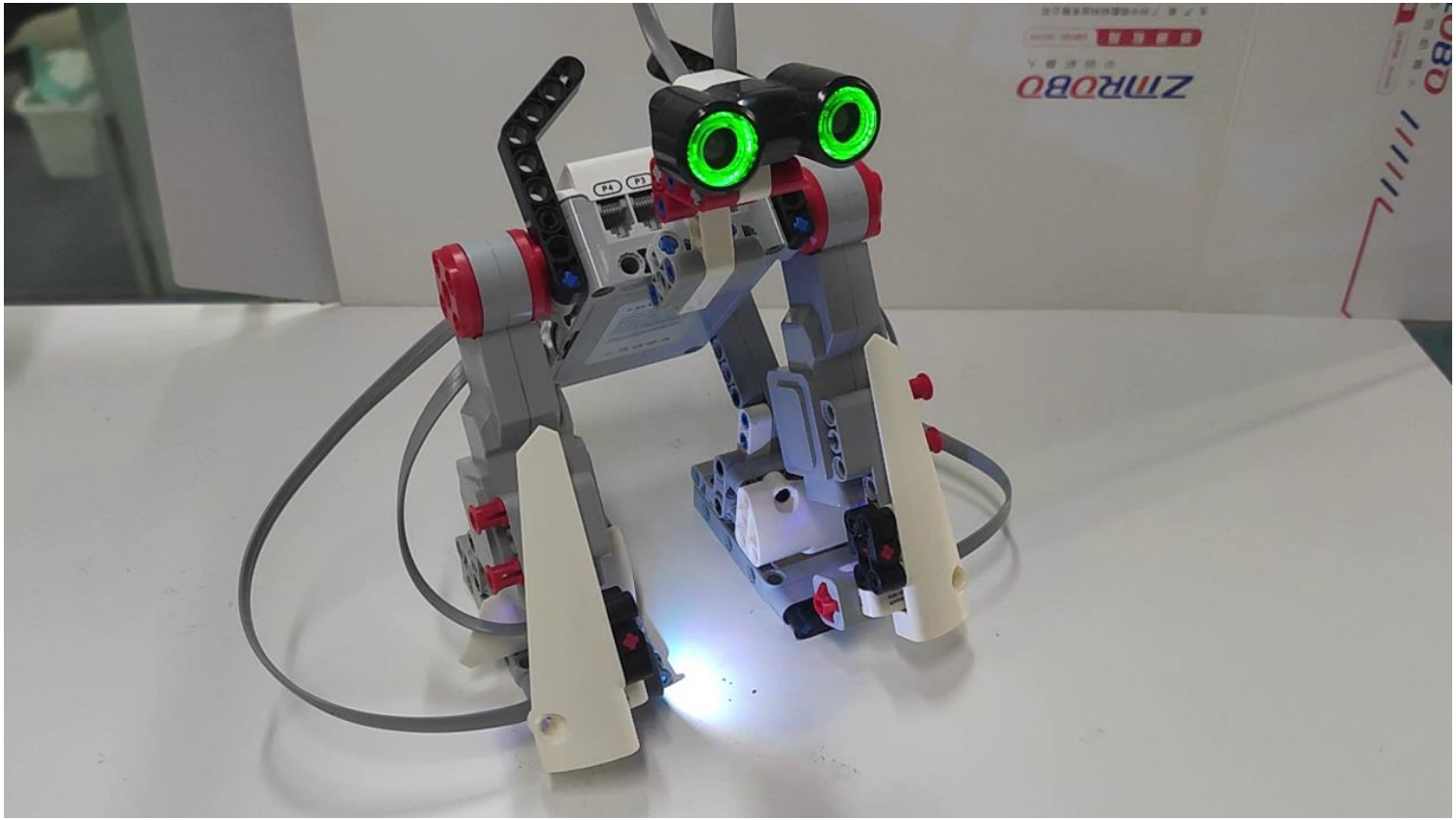

Project Tasks

Design a gorilla model and control it by using multiple sensors.

Requirements for robot functions:

1. The gorilla robot will have two action modes. When the ultrasonic sensor detects someone passing by, it will randomly execute one of them.
2. Action mode 1: The robot raises its left hand and waits for a handshake before putting it down (using the touch sensor).
3. Action mode 2: The robot raises its right hand to ask for a banana, and puts it down after getting it (the color sensor detects yellow).

Build a robot

1

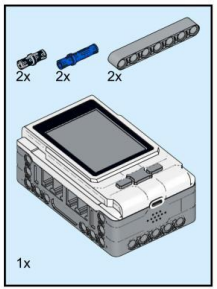

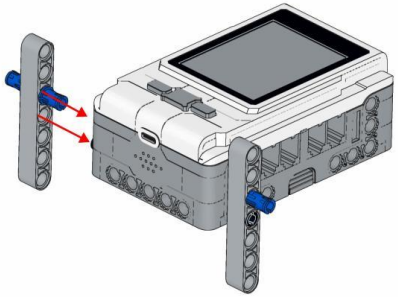

2

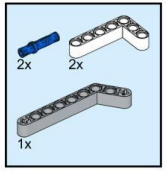

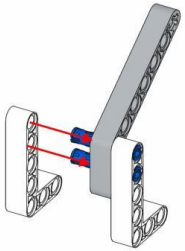

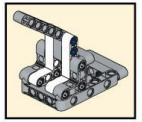

Build a robot

3

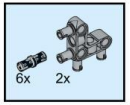

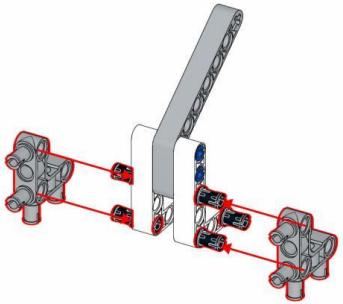

4

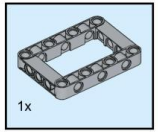

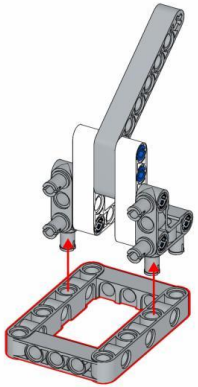

Build the gorilla's foot

Build a robot

5

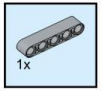

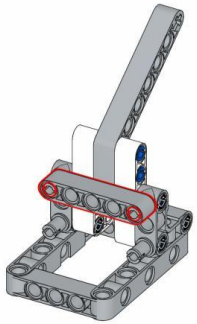

6

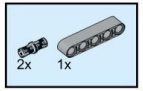

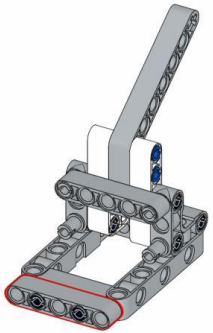

Build a robot

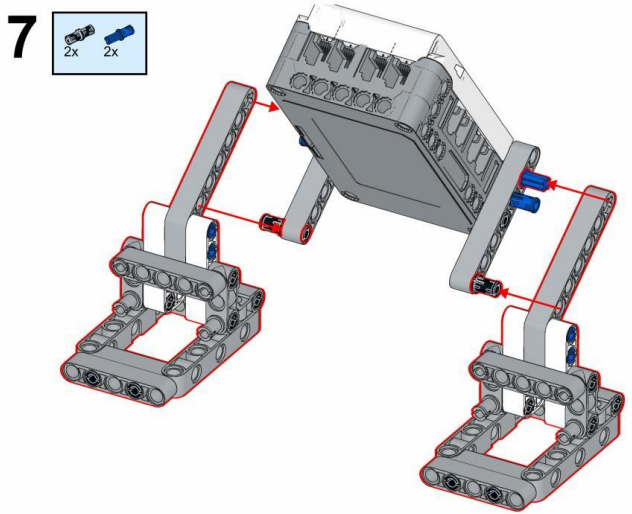

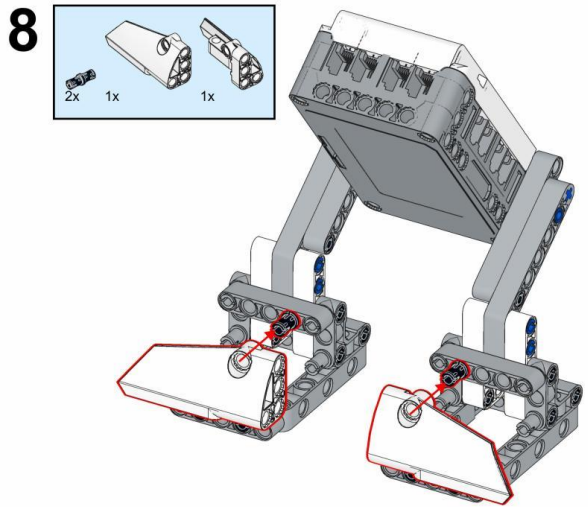

Build the gorilla's feet

Build a robot

9



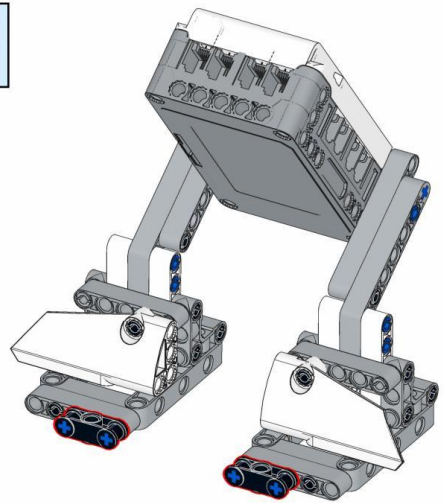

10

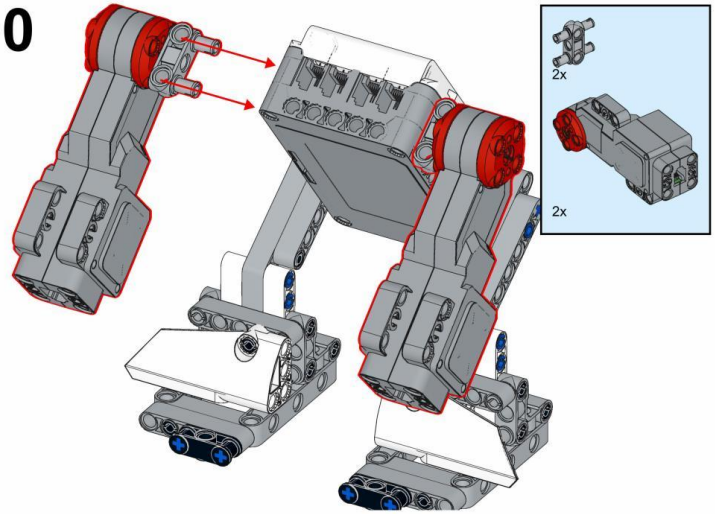

Build a robot

11

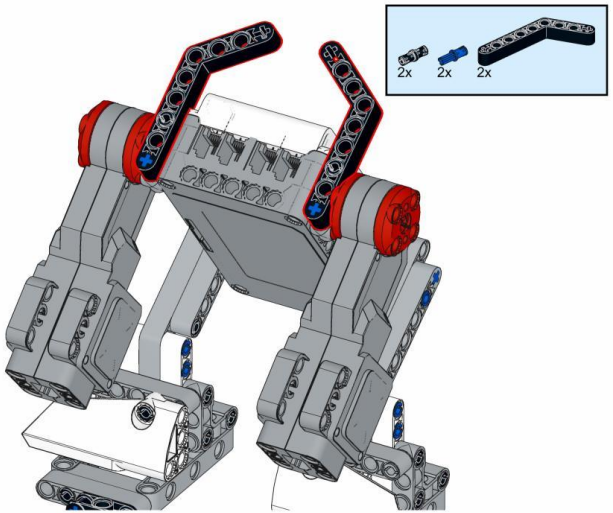

12

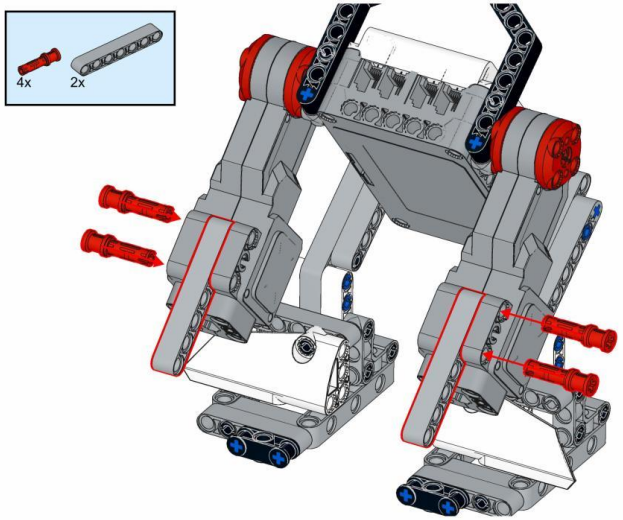

Build a robot

13

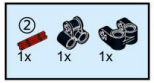

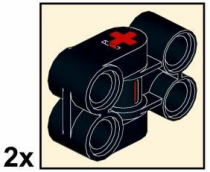



14



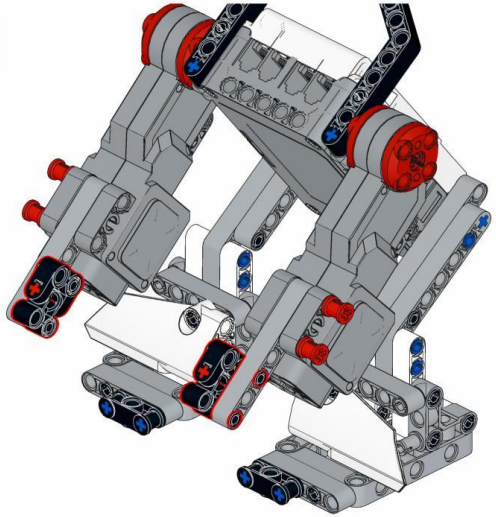

Build a robot

15

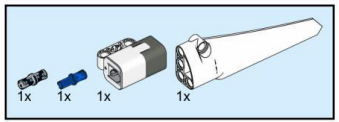

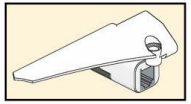

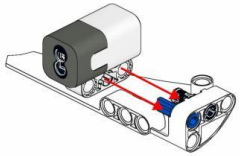

16



Install the color sensor

Build a robot

17

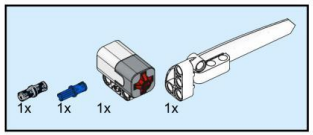

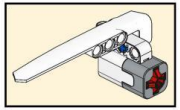

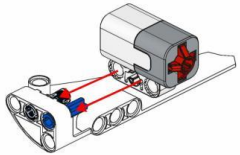

18

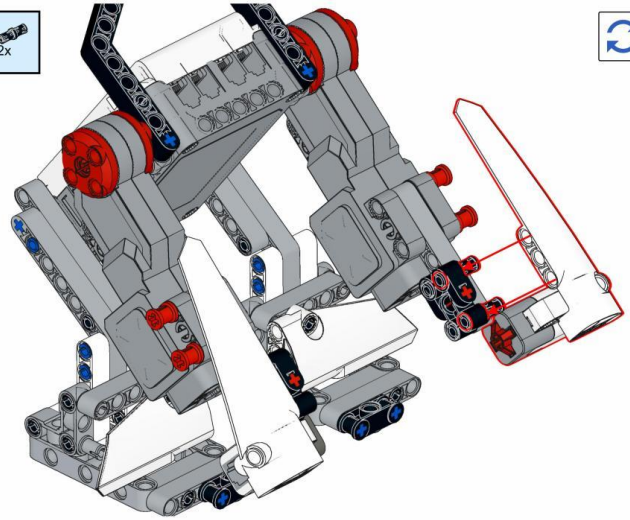

Install the touch sensor

Build a robot

19

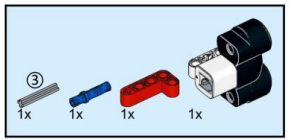

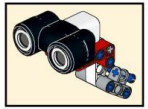

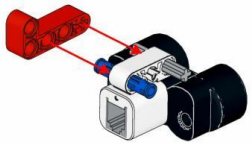

20

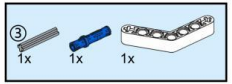

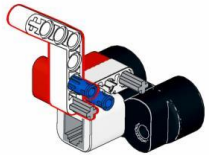

Build the head (ultrasonic sensor)

Build a robot

21

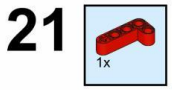

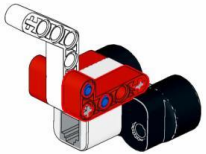

22

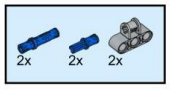

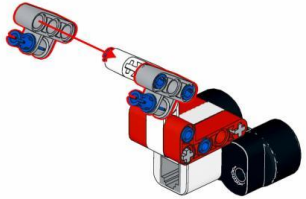

Build a robot

23

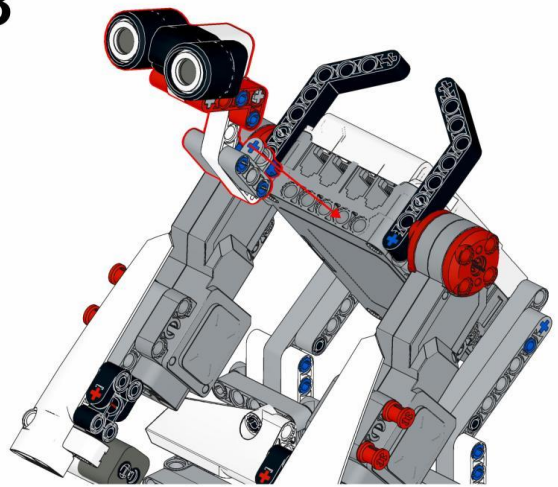

24

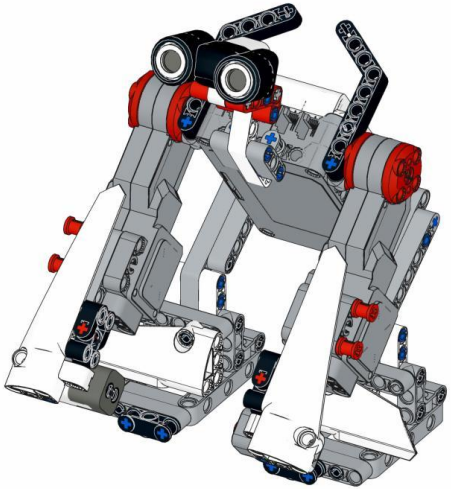

Build the head

Hardware Connection

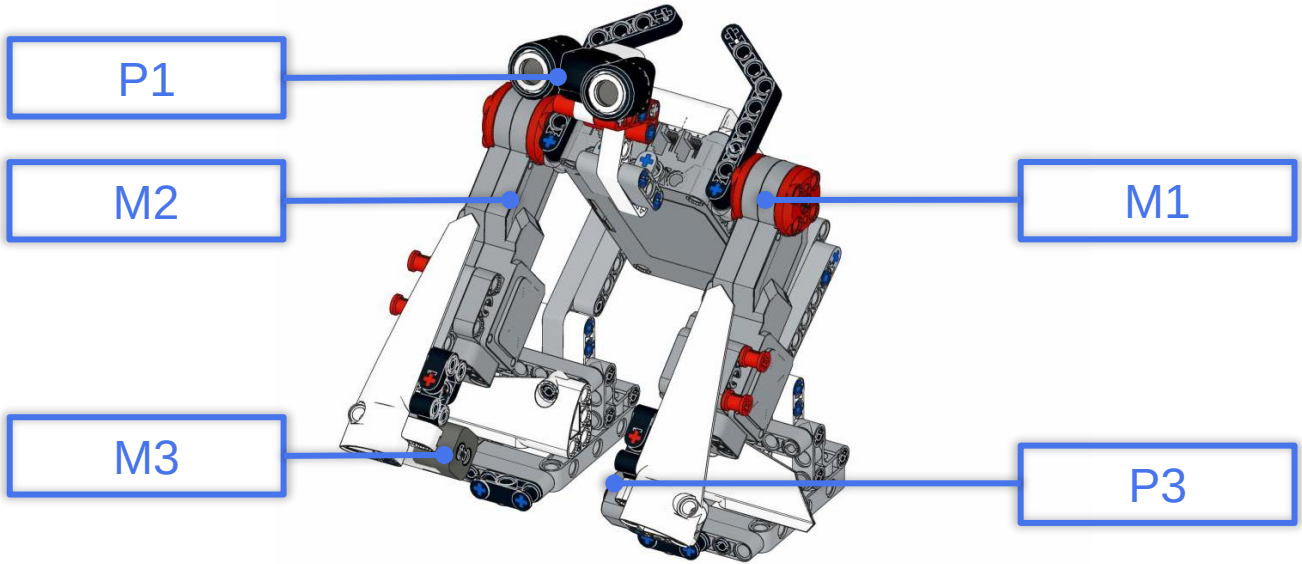

“

How do we achieve the required functions?

”

Distinguish between blocking and non-blocking motor coding blocks

It is necessary to choose blocking and non-blocking motor coding blocks according to the actual situation.



This coding block controls the motor to rotate to a specified angle, and then immediately executes the subsequent instructions.

It is generally used when there is **no need to** wait for the motor to rotate to a specified angle before executing other actions.

It can be used with the waiting time coding block.

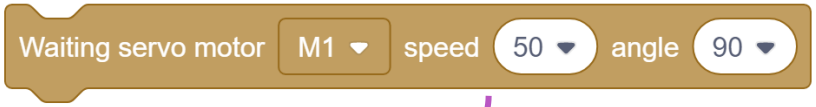

This coding block can wait for the motor to rotate a specified angle before executing subsequent instructions.

It is generally used in situations where you need to wait for the motor to rotate at a specified angle before executing other actions.

It will block when it encounters an obstacle.

Program Flow Chart

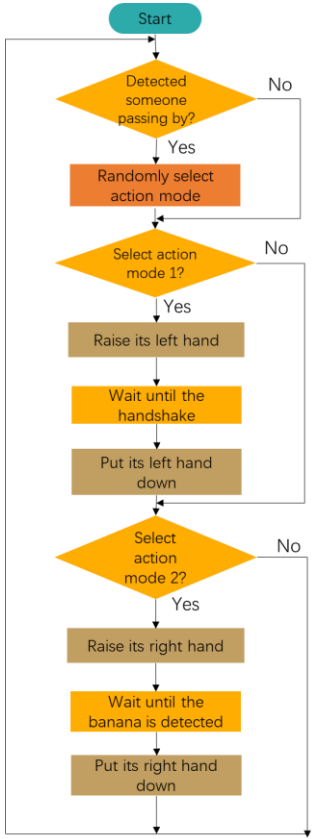

After the program starts, if someone passes by, an action mode is randomly selected.

Depending on the action mode, the robot performs the corresponding action.

1. Select the action mode when someone passes by

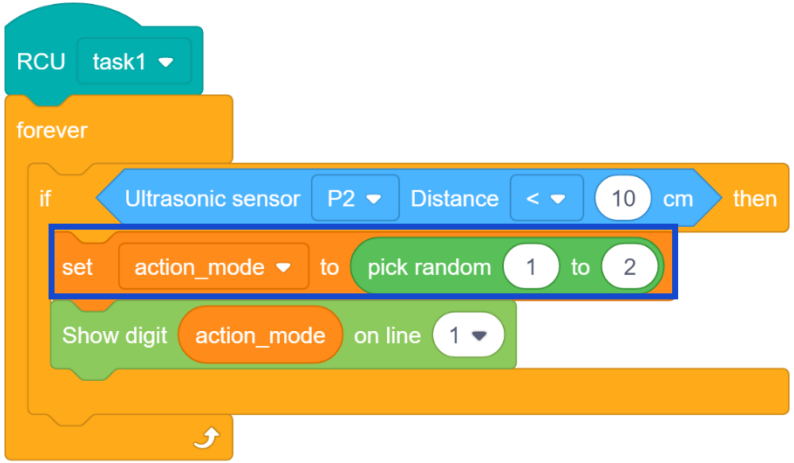

The program starts and continuously checks in a loop whether someone passes by.

If someone passes by, a random number between 1 and 2 is picked and stored in the variable "action mode".

The screen displays the value of the variable "action mode" for easy observation and debugging.

2. Waiting for the handshake mode

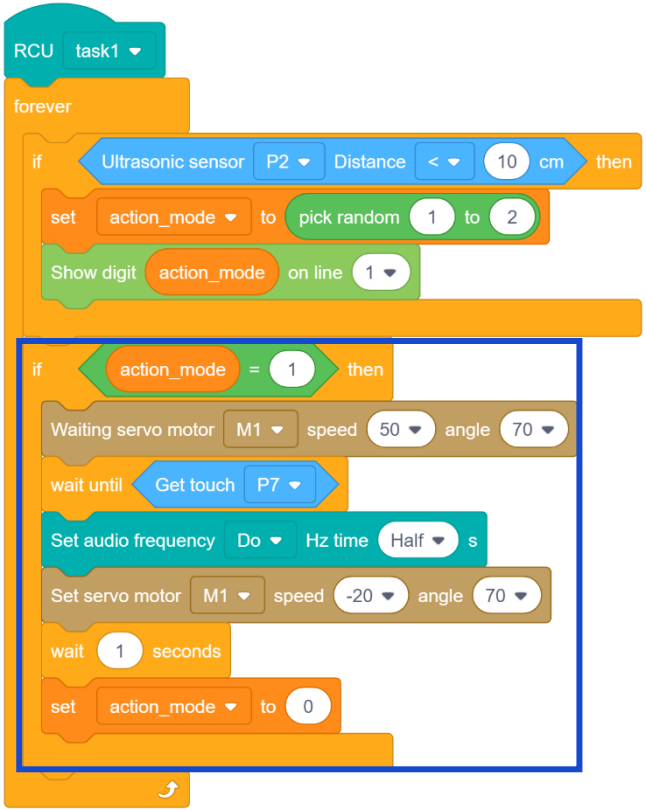

If the variable "action mode" is equal to 1, raise the left hand and wait for the touch sensor to be pressed before lowering the left hand.

Use a non-blocking motor control module to let the robot lower its left hand to avoid being blocked by the foot.

After executing the action, the value of the variable "action mode" must be reset to zero.

3. Asking for banana mode

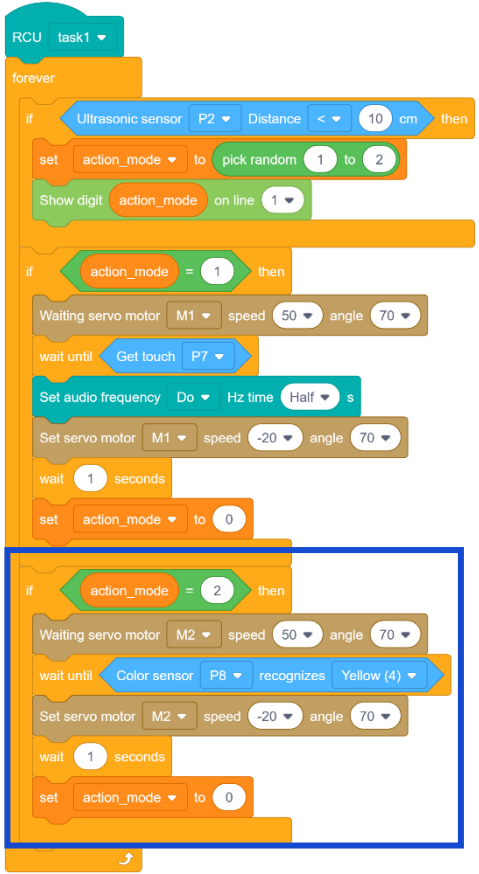

If the variable "action mode" is equal to 2, raise your right hand and wait for the color sensor to detect yellow before lowering your right hand.

After executing the action, the value of the variable "action mode" must be reset to zero.

Expansion Tasks

Added hand-waving dance action mode

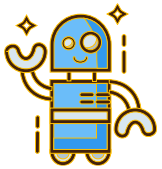

Expansion Program

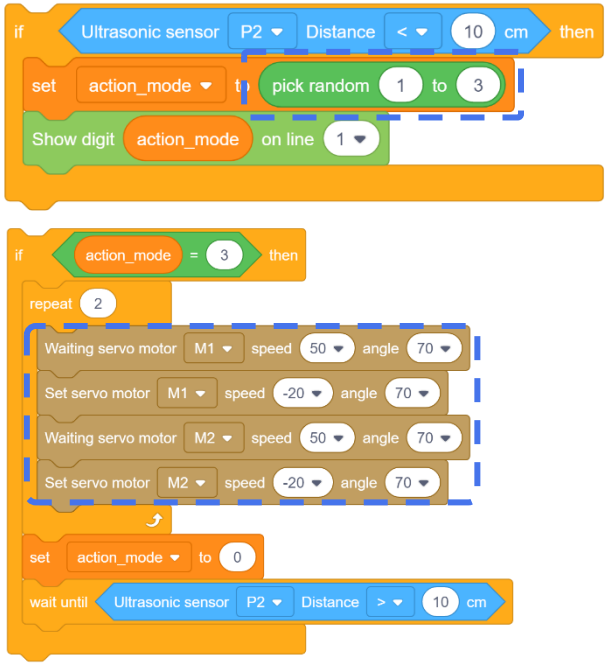

The random number range is 1 to 3.

If the variable "action mode" is equal to 3, repeat the action of swinging the left and right hands up and down twice.

Quiz

Single-choice question

The following description is incorrect ( )

A. The program will be blocked when running to the blocking motor module

B. The ultrasonic sensor can sense obstacles at a distance

C. To detect whether there is red, you can use the color sensor

D. The touch sensor has three states

Answer: D

Further Reading



Gorillas are social animals that usually live in groups led by adult males, with the number of members in a group usually ranging from a few to a dozen. The relationships between gorillas are complex, with subgroups, family affiliations, and loyalty to other gorillas.

Gorillas are omnivores, and their food mainly consists of fruits, leaves, flowers and bark, and sometimes insects and small mammals. Gorillas' diet needs to ensure a balance of energy and nutrition, and their food types and living habits vary depending on the season and region.

Further Reading



Gorillas also clean themselves to stay healthy. They use branches and other tools to remove dirt from their bodies, and shake their hair to remove parasites and brown pigments. Gorillas also select stronger branches and leaves to build a bed-like structure to protect themselves and their cubs.

Gorillas have high intelligence and learning ability, and can use tools, learn language, understand abstract concepts, etc. They can also pass on knowledge and skills by learning and teaching each other.

Thanks!

BE STEM READY