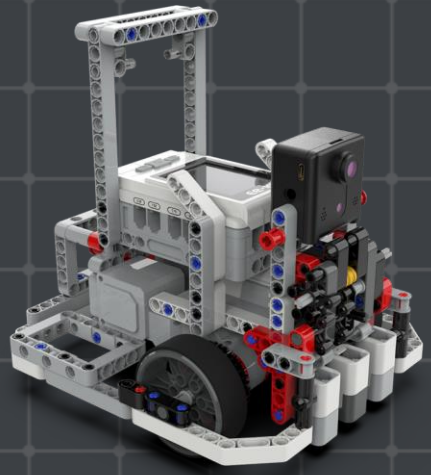

Lesson 28 | Skiing Robot |

Key points from this lesson:

1. Understand the program logic of "repeat until"

2. Learn to use the "repeat until" logic to write simple robot programs

Possible difficulties from this lesson:

1. Master the application of the program logic of "repeat until"

Skiing

Skiing is a recreational or sport activity performed on the snow. Skiers need to use special skis or ski boots and other equipment to slide on the snow with the help of gravity.





Alpine Skiing



Alpine skiing is a snow racing sport that uses skis, snowshoes, bindings and ski poles as the main equipment, sliding down the mountain along the track set by the gate. It originated in the Alps region of Europe, so it is also called "Alpine skiing".

Project Tasks

Design a skiing robot model and control it with the touch sensor.

Requirements for robot functions:

1. After pressing the touch sensor, the robot will ski for a while and then stop.

2. If the robot encounters an obstacle while skiing, it will turn, otherwise it will go straight.

3. After pressing the touch sensor, the buzzer will sound once, and the screen will display "Skiing" when the robot is skiing, and "Stop Skiing" when it stops.

Effect Demonstration

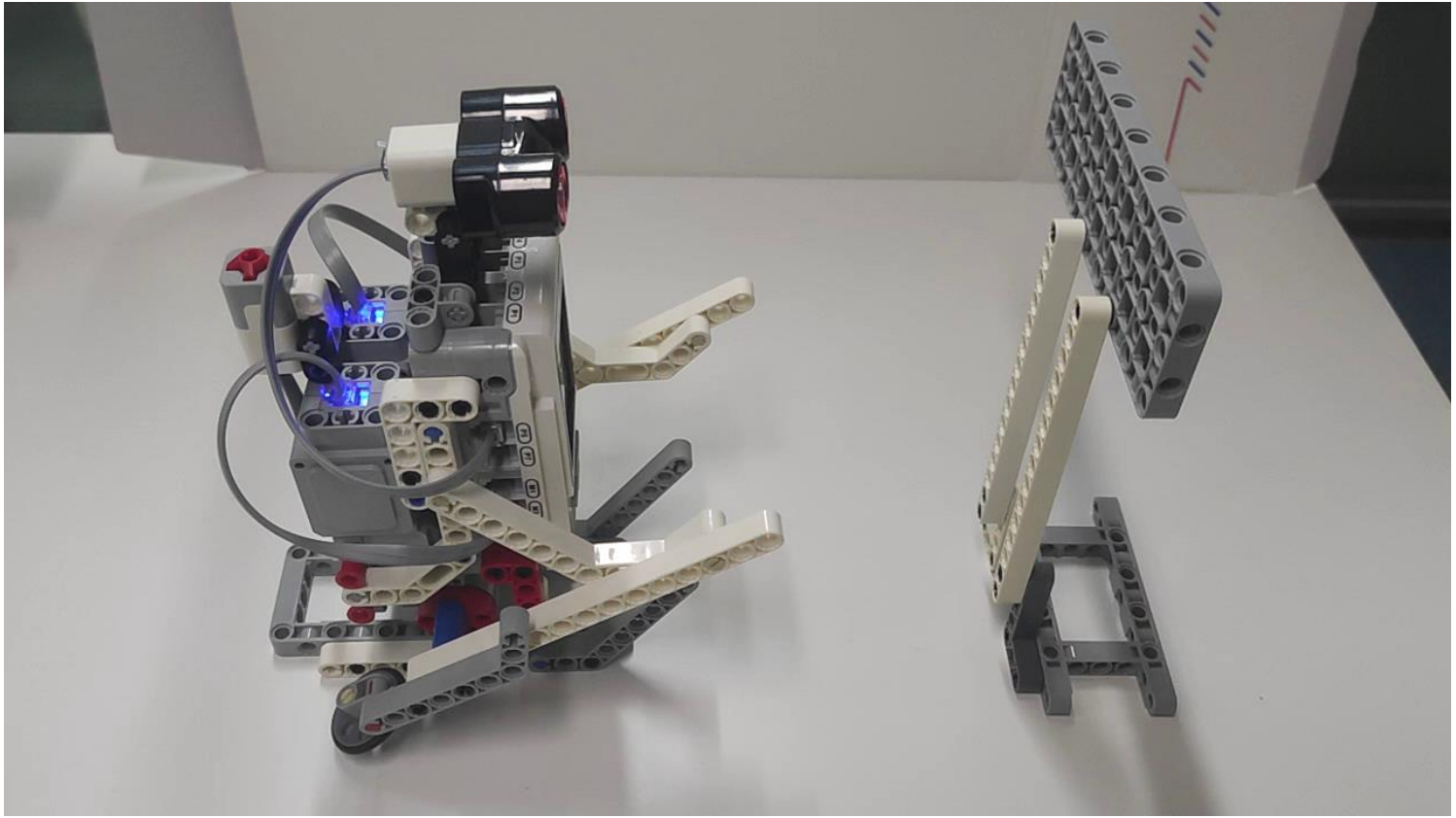

Build a robot

1

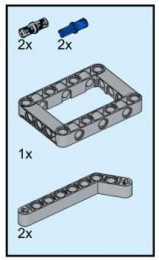

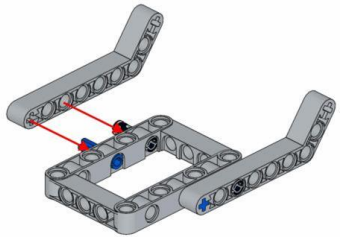

2

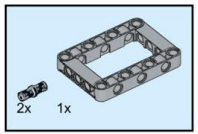

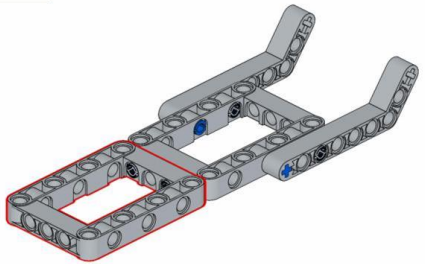

Build a pair of ski

Build a robot

3

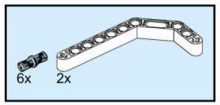

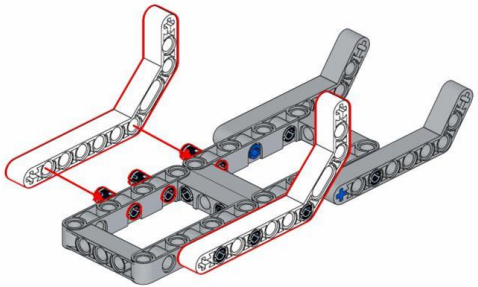

4

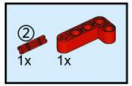

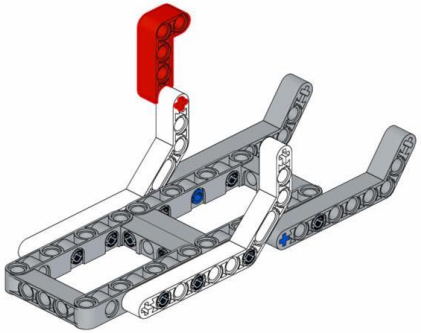

Build a robot

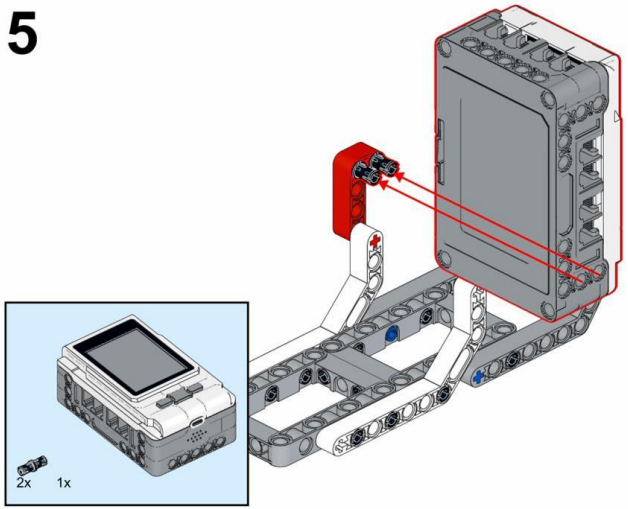

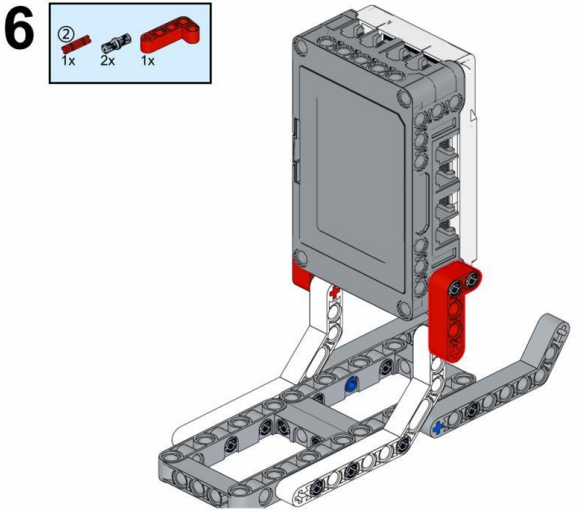

Install the controller

Build a robot

7

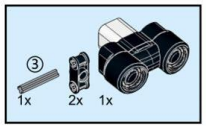

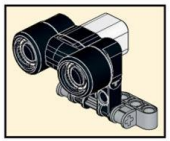

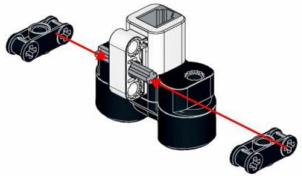

8

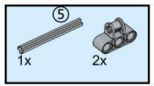

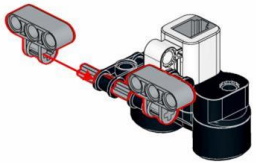

Assemble the components of an ultrasonic sensor

Build a robot

9

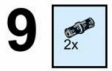

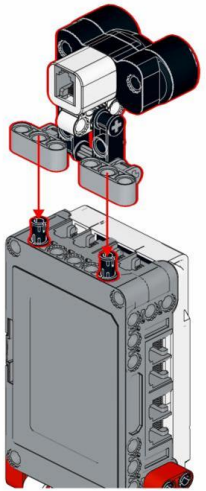

10

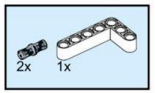

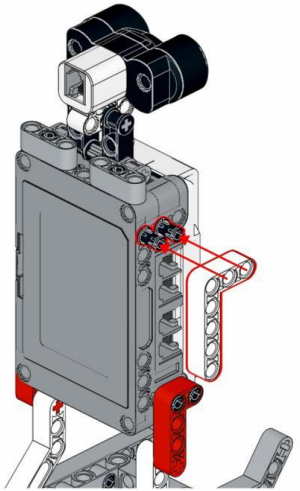

Build a robot

11

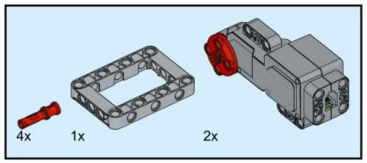

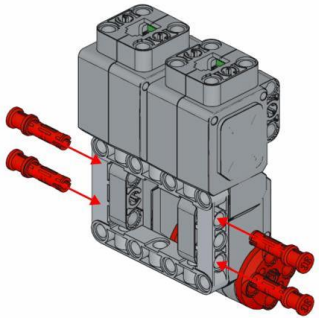

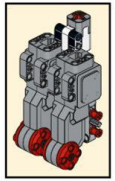

12

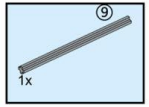

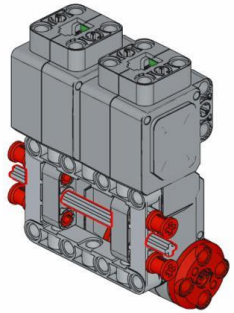

Build a robot

13

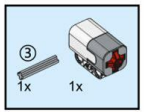

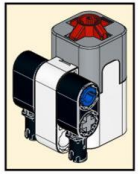



14

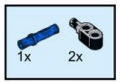

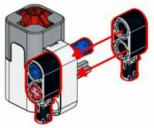

Assemble the components of an touch sensor

Build a robot

15

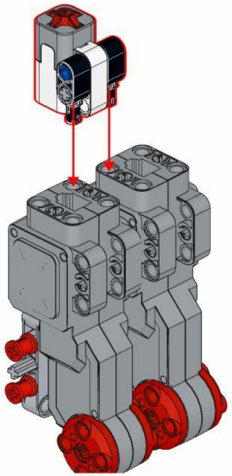

16

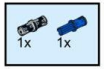

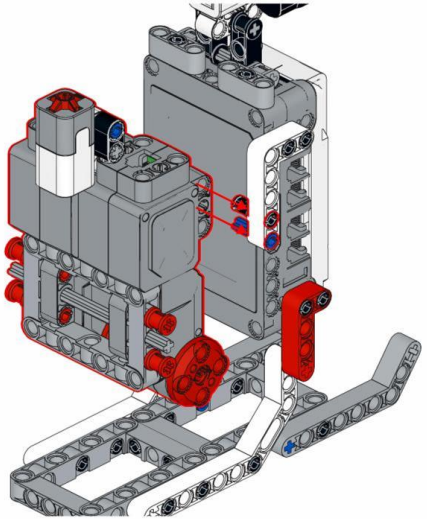

Build a robot

17

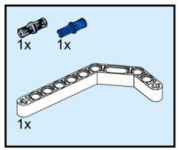

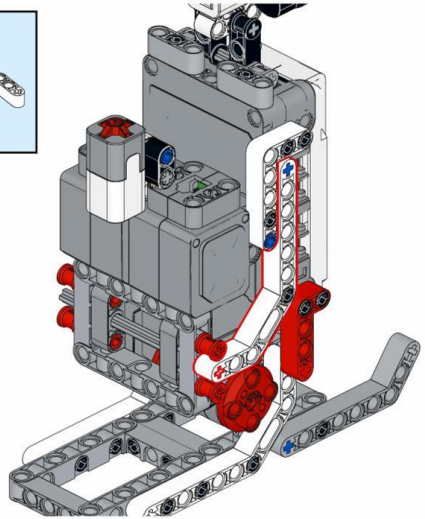

18

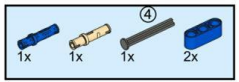

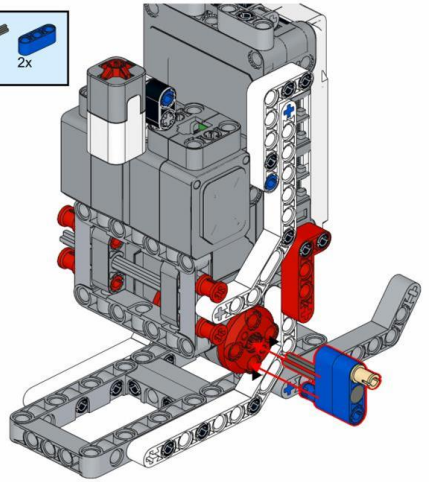

Build a robot

19

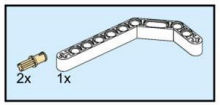

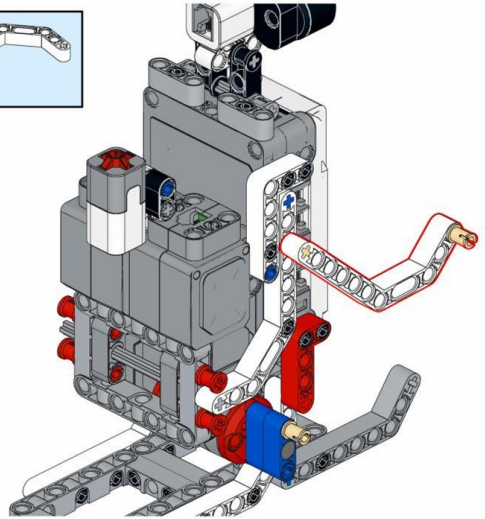

20

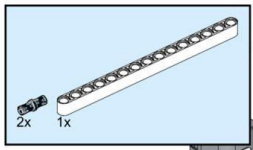

Build ski poles

Build a robot

21

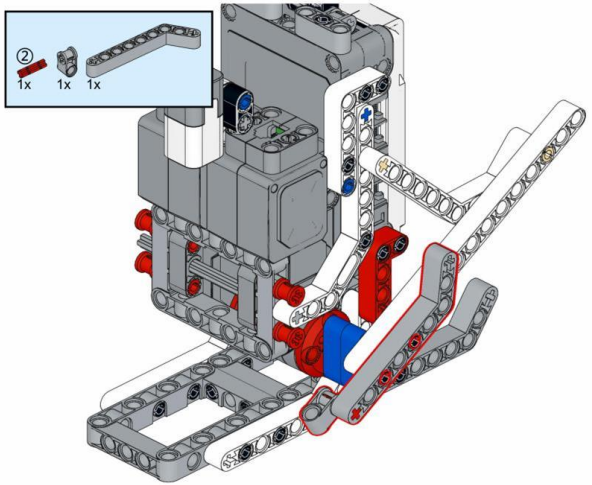

22

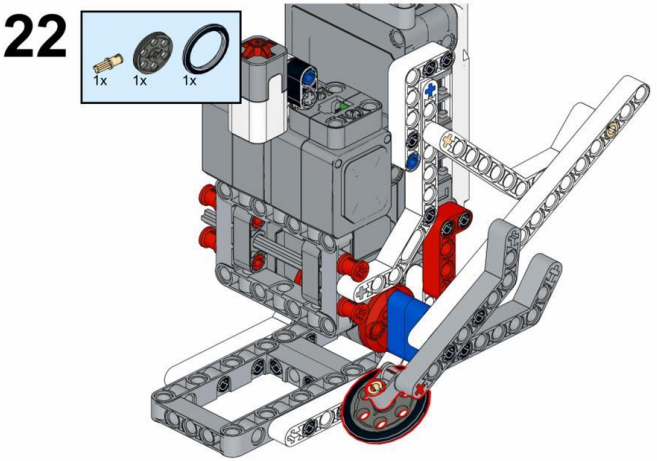

Build a robot

23

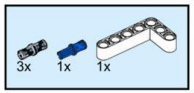

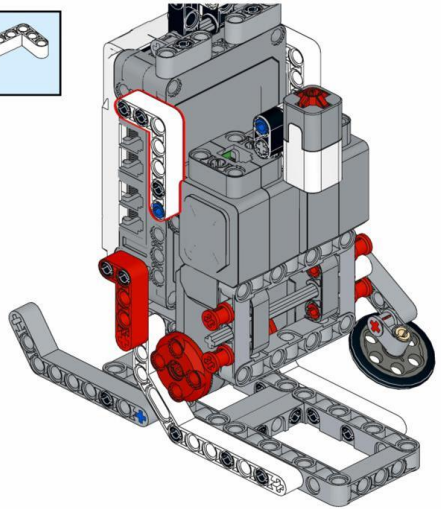

24

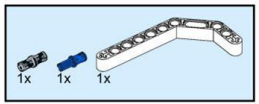

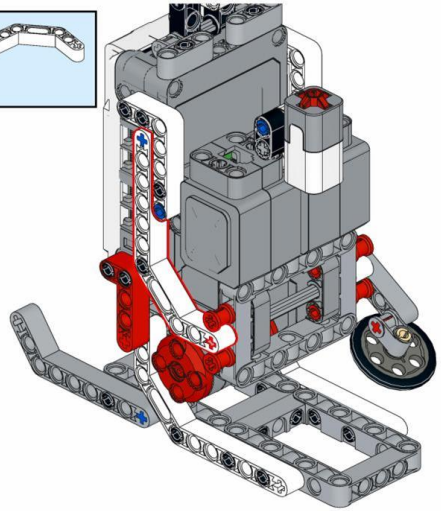

Build a robot

25

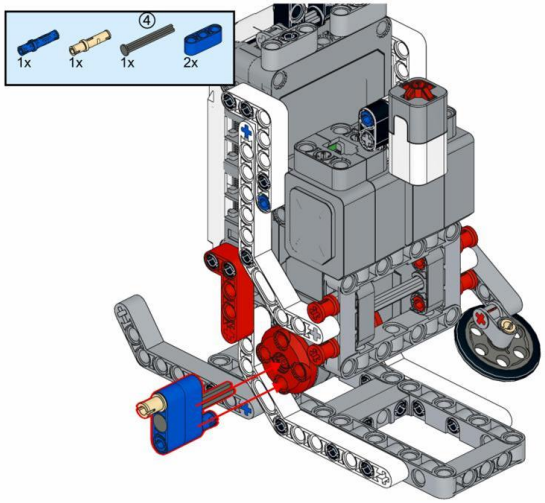

26

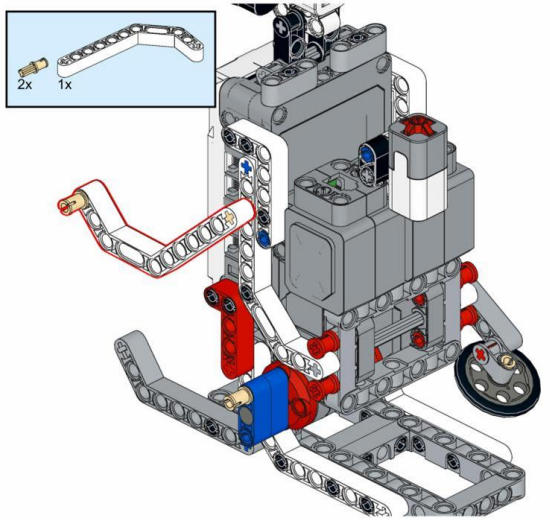

Build a robot

27

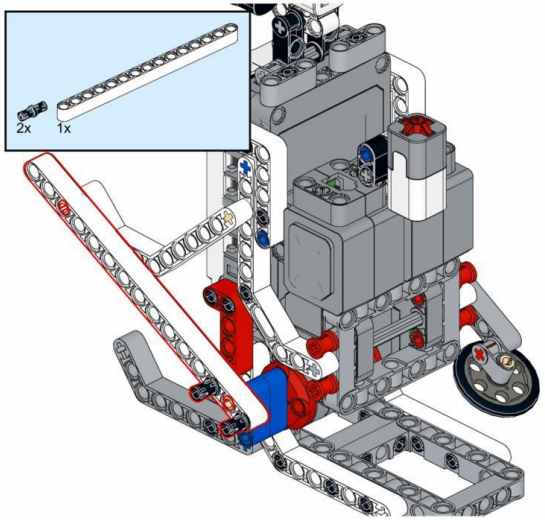

28

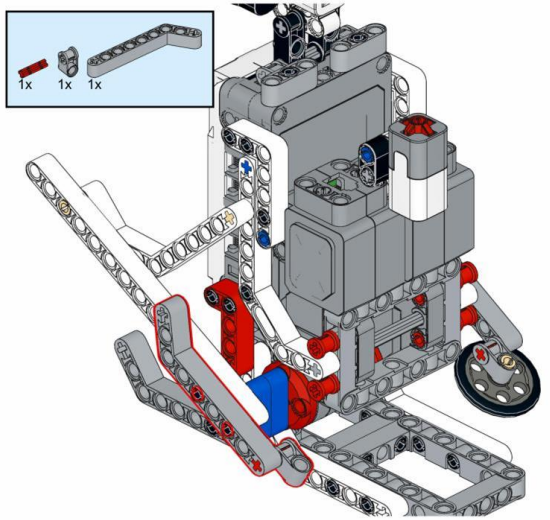

Build a robot

29

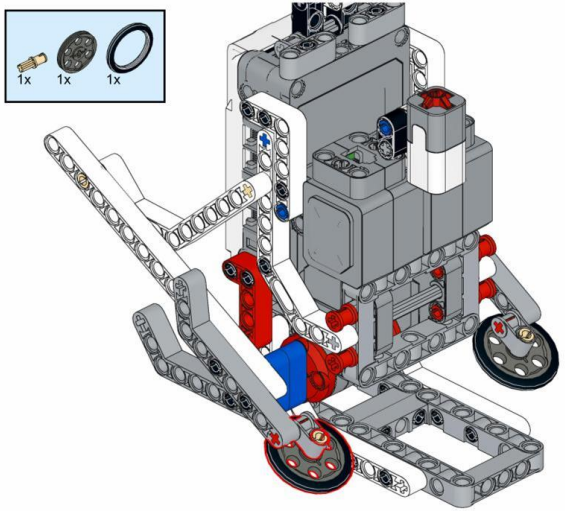

30

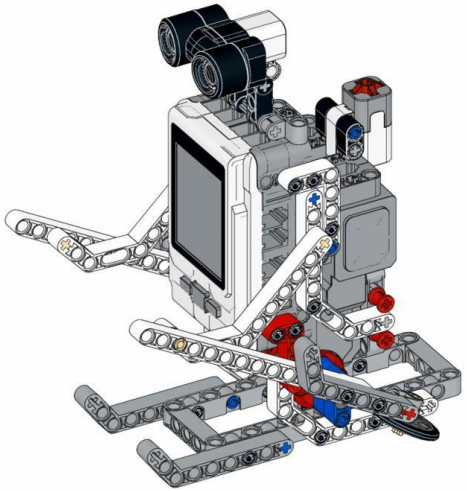

Hardware Connection

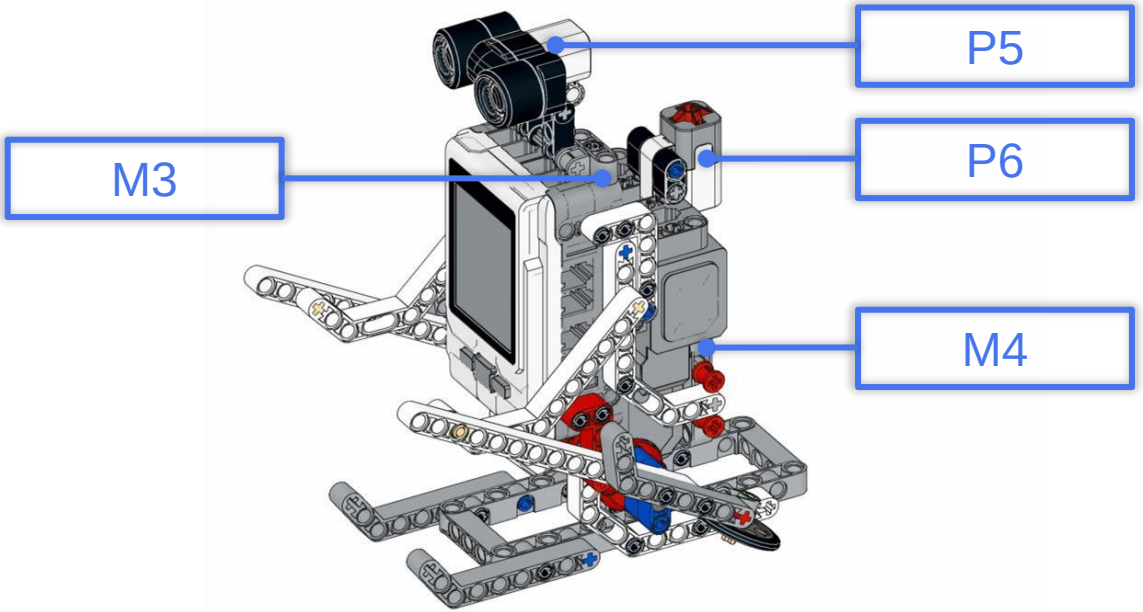

“

How do we achieve the required functions?

”

Coding block - set motor (M1) (M2) moving speed (50) coding (1000)

This block makes the left and right motors of the specified port rotate synchronously to the specified encoding value. Note that the waiting time needs to be increased. If this module is repeatedly executed, the two motors will always be in the slow start process and cannot start.

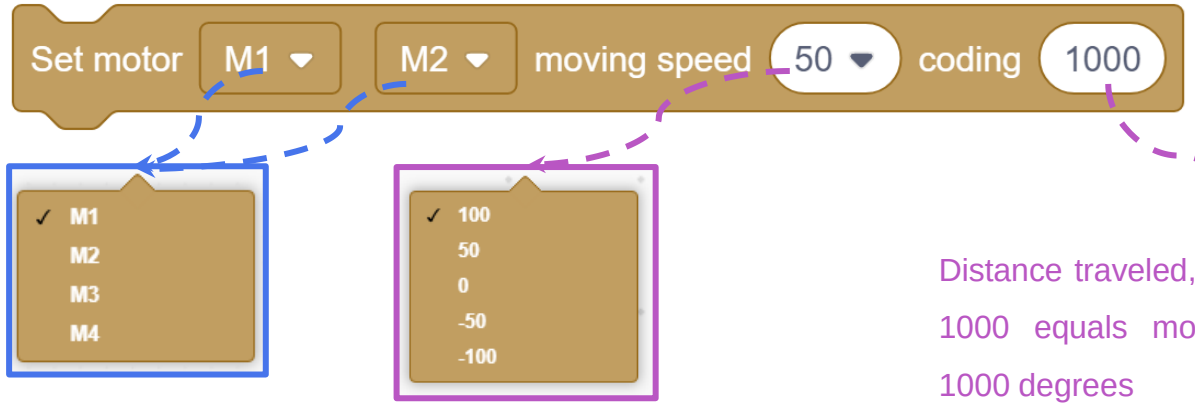

Motor port, optional "M1-M4"

The motor speed gradually increases from 0 to this value, and then gradually decreases to 0.

Distance traveled, code value 1000 equals motor rotation 1000 degrees

Coding block - set motor (M1) (M2) turning speed (50) coding (1000)

This block makes the left and right motors of the specified ports turn and go to the specified encoding value. Note that you need to increase the waiting time. If you repeat this block, the two motors will always be in the slow start process and cannot start.

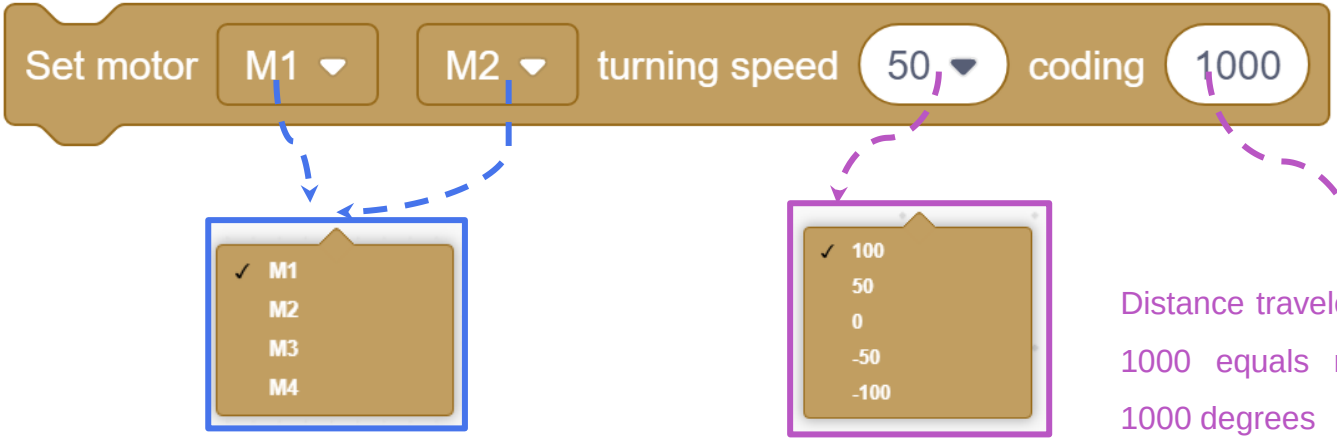

Motor port, optional "M1-M4"

The motor speed gradually increases from 0 to this value, and then gradually decreases to 0.

Distance traveled, code value 1000 equals motor rotation 1000 degrees

Initial position of the skiing robot

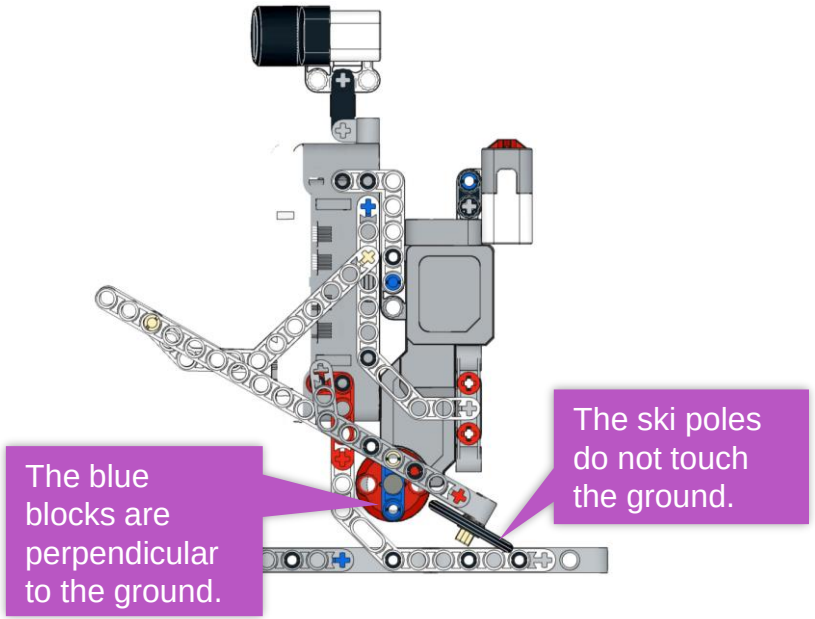

The initial position of the ski robot is when the crank (blue block) is perpendicular to the ground and the poles are not touching the ground.

Please manually adjust the robot's motion to the initial position.

Test skiing moves

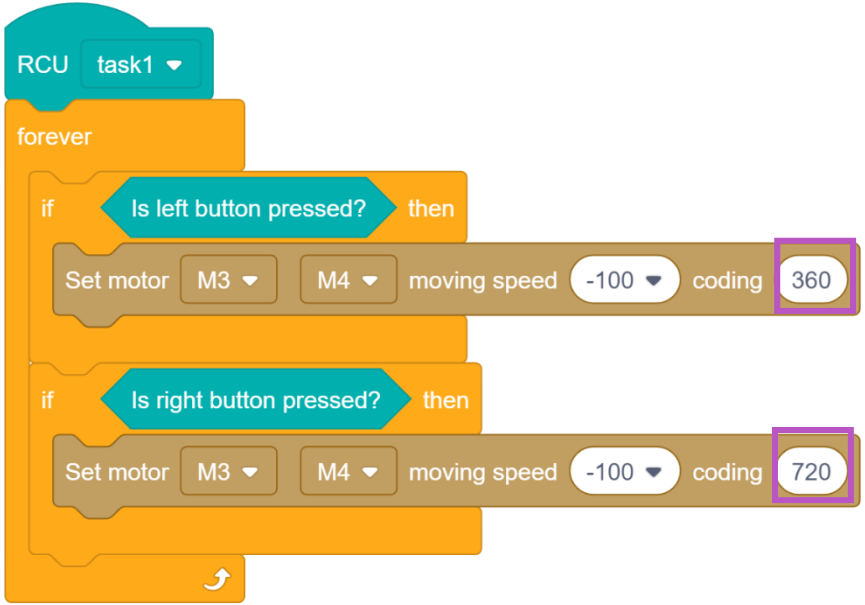

Press the left button to make M3 and M4 reverse one circle synchronously at a speed of 100; press the right button to make M3 and M4 reverse two circles synchronously at a speed of 100.

Note that the direction of motors M3 and M4 should be set to "positive" in the built-in test.

Download the program and run the test



Test results

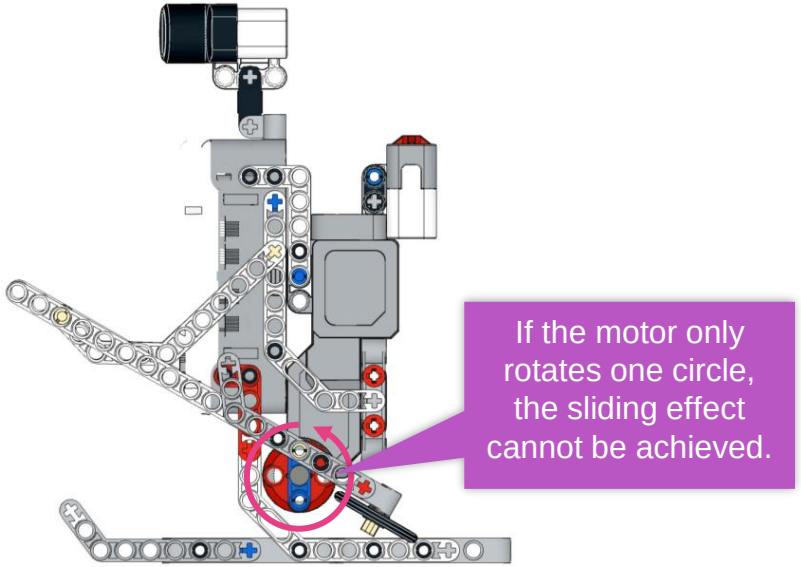

After testing, it can be found that the motor needs to rotate two circles to make the robot slide normally.

Because if the motor rotates only one circle, the motor will complete a circle before accelerating to 100 speed.

Get the waiting time for two synchronous rotations

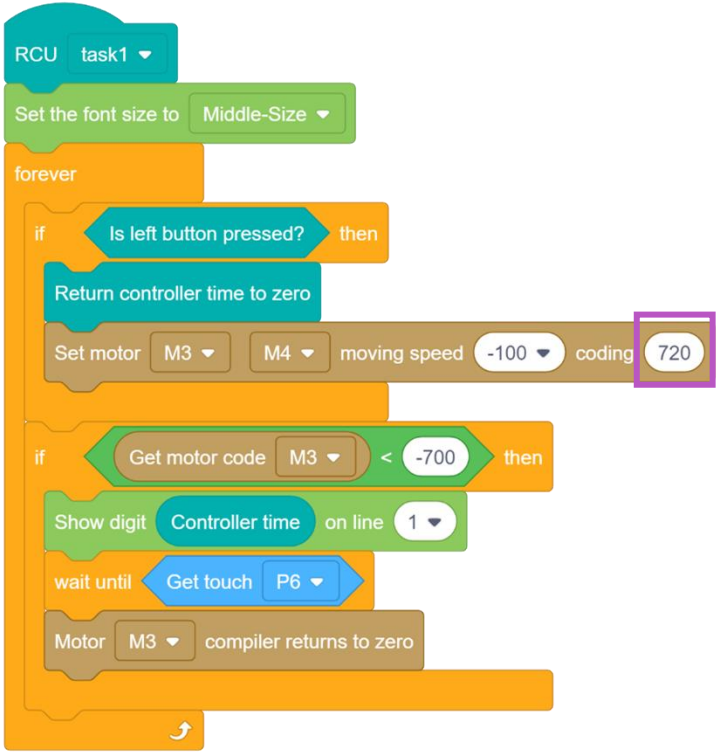

Press the left button to reset the controller time to zero, and then make motors M3 and M4 rotate two circles synchronously.

If two circles are rotated, record the time required for the rotation.

Download the program and run the test



Coding block - repeat until

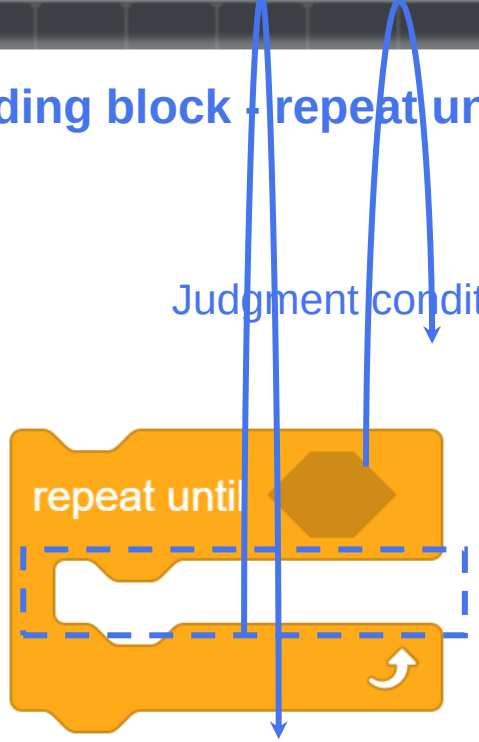

Repeat the program in this box until the judgment condition is met.

Repeat the program in the semi-enclosing box until the condition in the hexagonal box is met, and then execute the subsequent (below) program.

Be careful not to confuse with the "wait until“ module

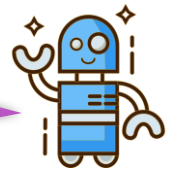

Coding block - repeat until

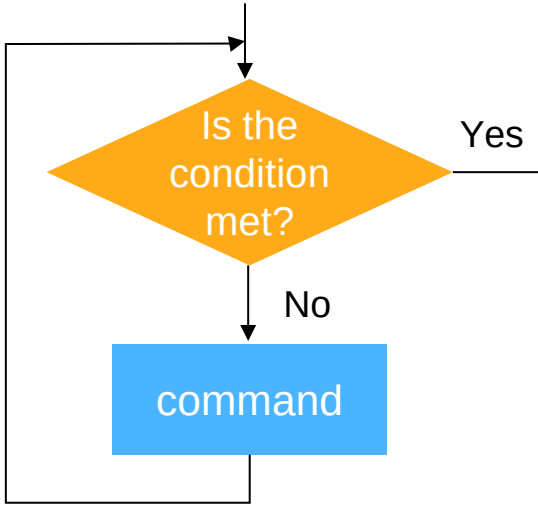

The flowchart of the "repeat until" program

"Repeat until" is a type of loop structure.

When the condition is not established, enter a loop. After executing the commands in the loop once, it is then judged whether the condition is established.

If the condition is true, break out of the loop.

1. Pressing the touch sensor will reset the controller time to zero

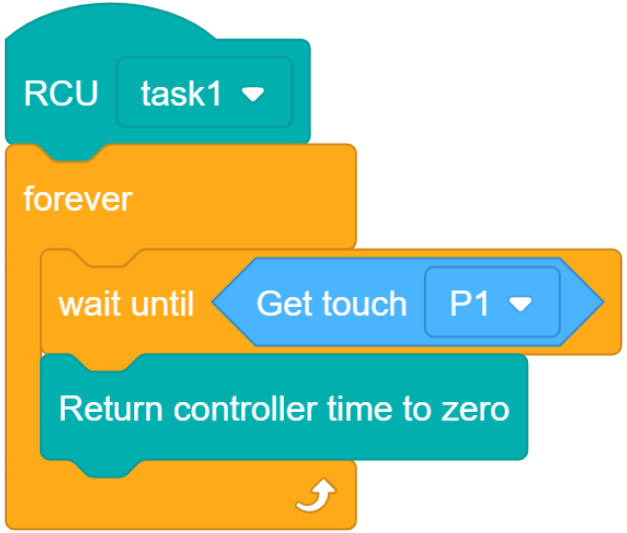

Wait for the touch sensor to be pressed. If the touch sensor is pressed, the controller time will be reset to zero.

2. Let the robot ski for a while

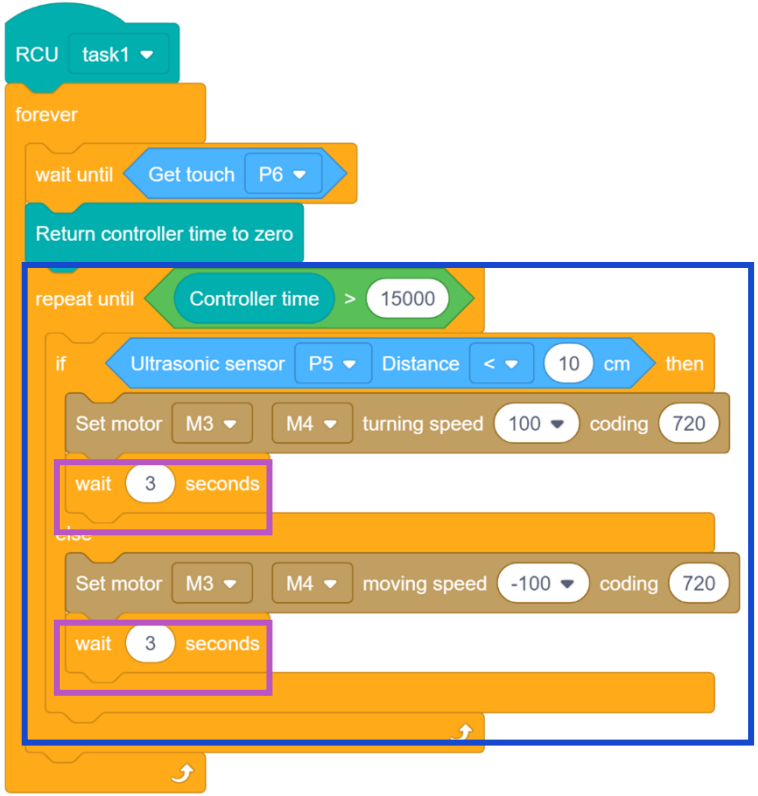

Within the specified time (set by yourself), the robot skis and turns if it encounters an obstacle (the obstacle avoidance distance is set by yourself).

If the specified time is exceeded, the skiing action stops.

The waiting time required for the motor to rotate two circles is greater than the actual test time for rotating two circles.

3. Add prompts

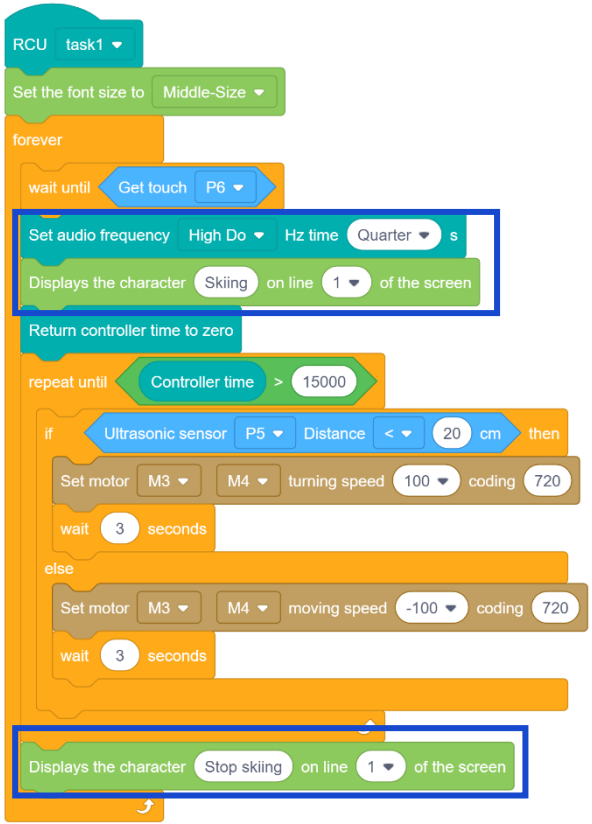

Set the font size to “Middle-size".

When you press the touch sensor button, the buzzer sounds once and the screen displays "Skiing". When the time is up, it displays "Stop skiing".

Adjust the robot to its initial position and then run the program

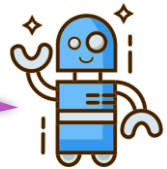

Expansion Tasks

Use the touch sensor button to control the start and stop of skiing



Expansion Program

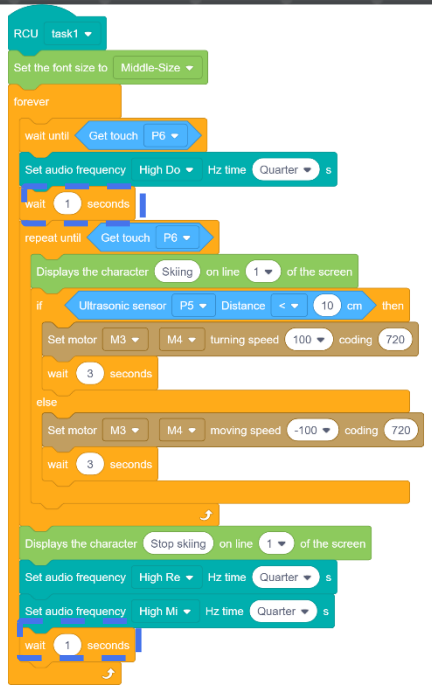

After pressing the touch sensor button, the robot starts skiing. It will not stop skiing until the touch sensor button is pressed and held again.

Note that the waiting time should be increased to allow time to release the touch sensor button.

Quiz

Single-choice question

Which of the following statements is wrong regarding the "repeat until" logic? ( )

A. It is also a loop structure

B. The subsequent program will be run only when the judgment condition is met

C. The program in the loop structure will be executed only when the judgment condition is not met

D. The program in the loop structure will be executed first, and then the judgment will be made

Answer: D

Further Reading



Skiing originated in the extremely cold regions in the north of Eurasia. Initially, because the cold winter brought inconvenience to people's lives, to survive in this harsh natural environment, people may have used belts to tie large pieces of animal bones to leather boots as skiing tools, allowing people to gallop freely in the vast forests and snowfields, chase prey, and carry out human life and production activities.

Further Reading



Skiing (especially modern competitive skiing) has developed to the present day, with more and more events and expanding fields. The major regular events in world competitions are divided into: alpine skiing, Nordic skiing (Nordic Skiing, cross-country skiing, ski jumping), freestyle skiing, biathlon skiing, snowboard skiing, etc.

The more famous large-scale ski resorts in China include: Yabuli Ski Resort, Beidahu Ski Resort, Changbai Mountain Ski Resort, Wanlong Ski Resort, Songhua Lake Resort, etc. These ski resorts are basically distributed in the north.

Thanks!