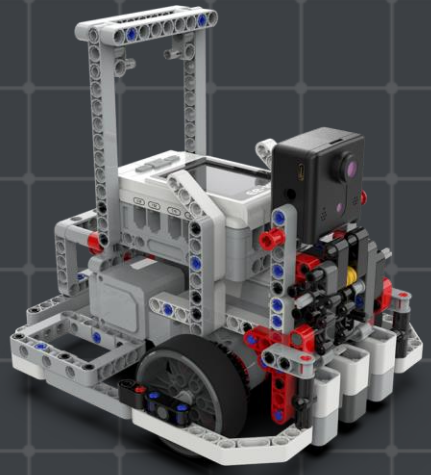

Lesson 23 | Electric Bulldozer |

Key points from this lesson:

1. Understand the meaning of motor power

2. Learn to write programs to control the maximum motor power in different situations

Possible difficulties from this lesson:

1. Understand how to set the maximum motor power

Bulldozer

A bulldozer is a machine used to level the land and tidy up the land surface. When leveling the land, the bulldozer can level the uneven mounds, potholes, etc. on the ground, making the land surface more flat and smooth.



Bulldozer

Bulldozers are usually powered by gasoline or diesel, but some are powered by batteries or other forms of electricity. Electric bulldozers are more efficient and environmentally friendly in certain specific application scenarios, such as limited spaces such as indoors or underground.





Effect Demonstration

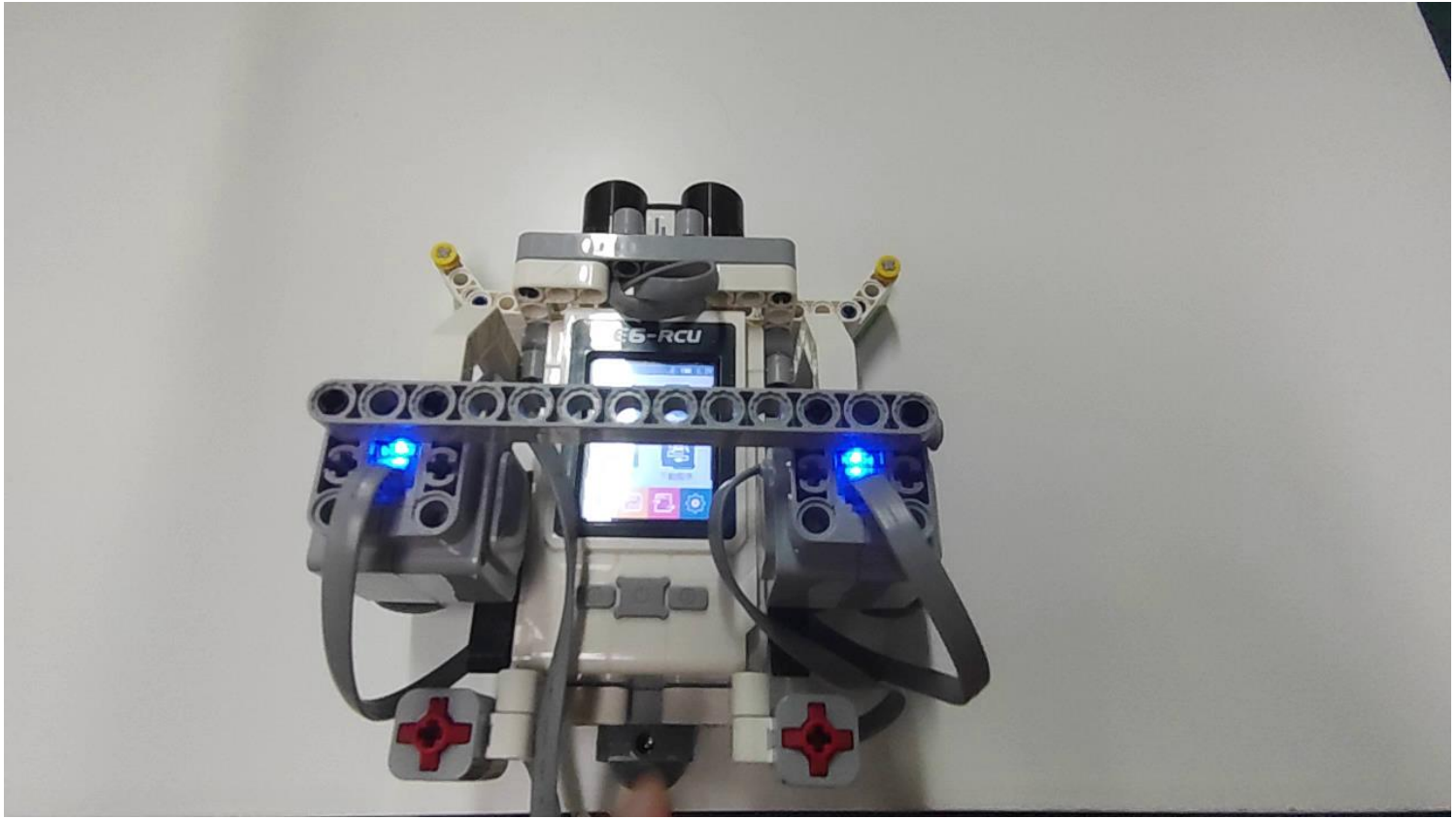

Project Tasks

Design an electric bulldozer model and control it using the touch sensors and the ultrasonic sensor.

Requirements for robot functions:

1. Use two touch sensors to control the moving speed of the bulldozer.
2. When the bulldozer moves forward slowly and straight, the screen displays "low power"; when it moves forward quickly, the screen displays "high power".
3. When the ultrasonic sensor detects an obstacle of a certain height, the bulldozer stops and displays "obstacle“
4. When switching working states, the buzzer emits a sound prompt.

Build a robot

1

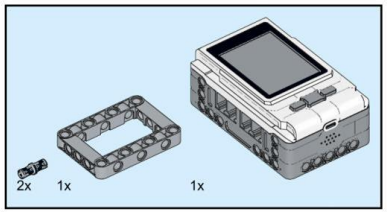

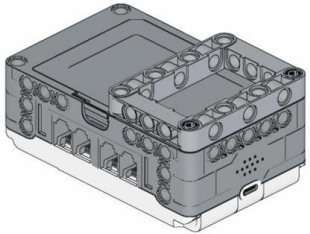

2

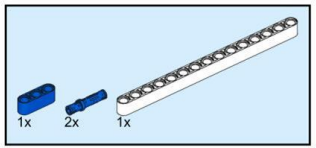

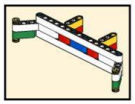

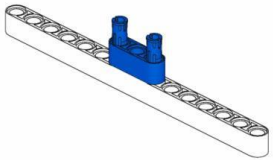

Build a robot

3

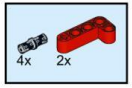

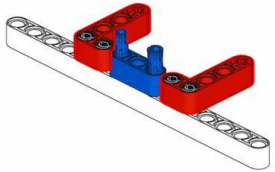

4

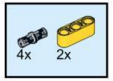

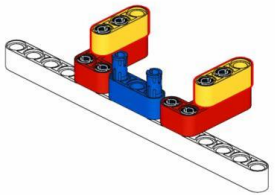

Build a robot

5

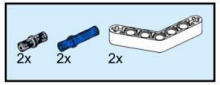

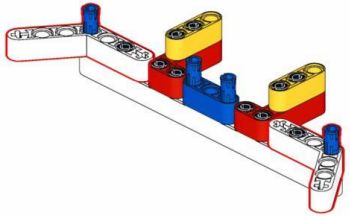

6

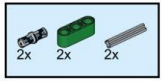

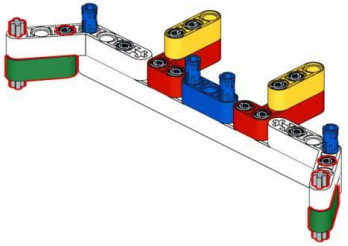

Build a robot

7

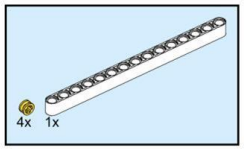

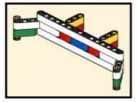

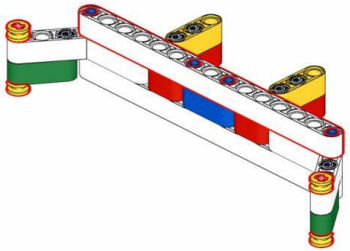

8



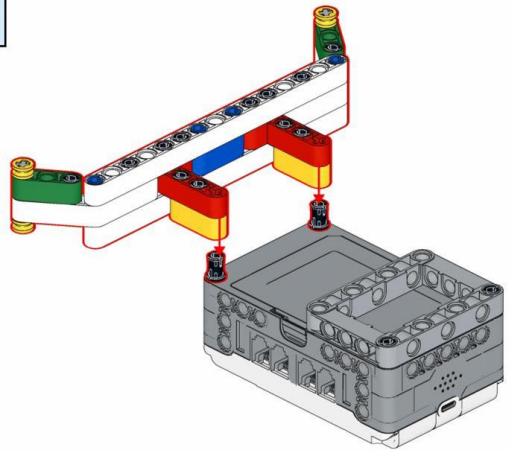

Build a robot

9

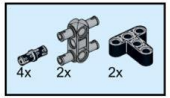

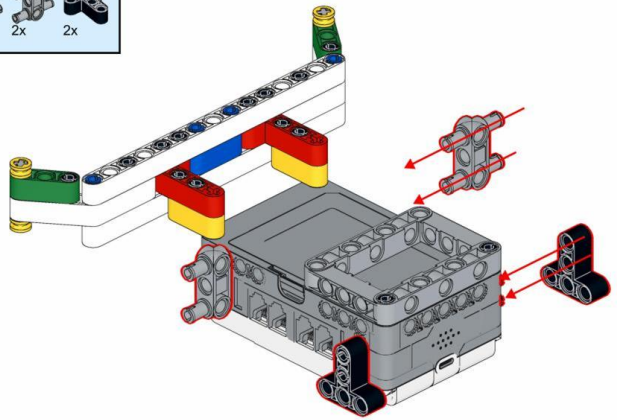

10

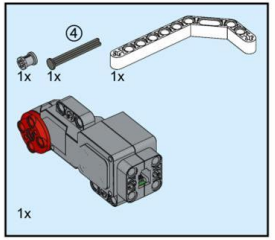

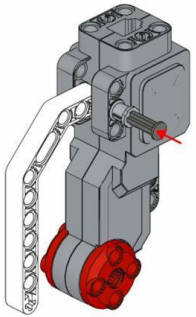

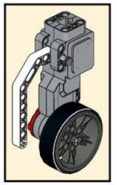

Build a robot

11

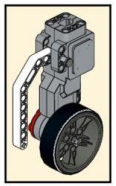

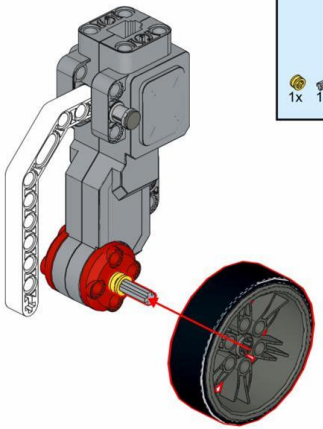

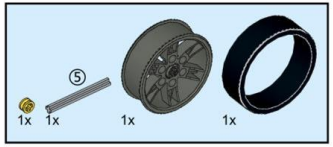

12



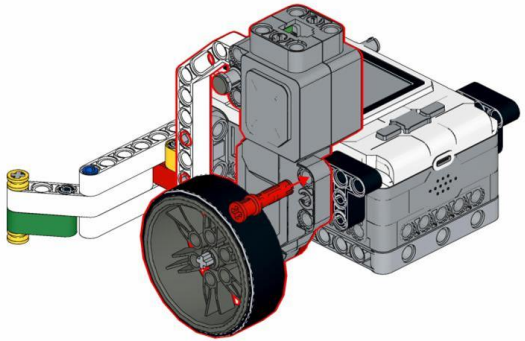

Install the large motor on the left

Build a robot

13

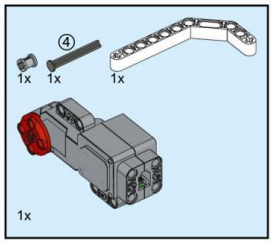

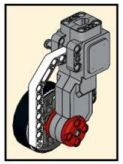

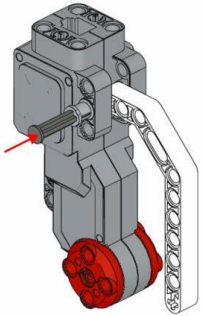

14

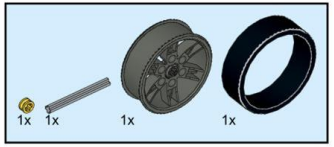

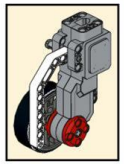

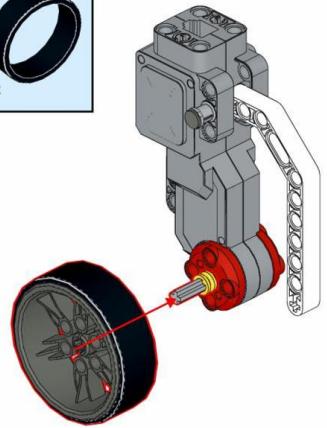

Build a robot

15

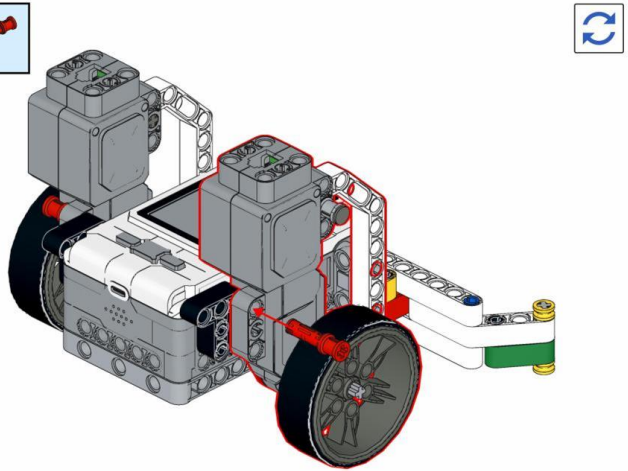

16

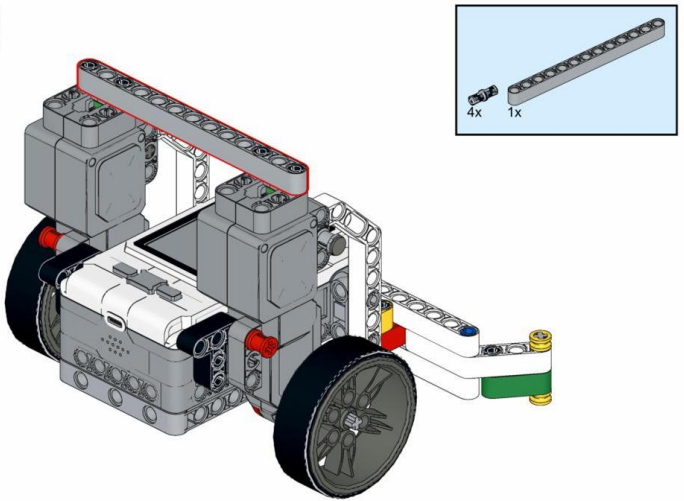

Install a large motor on the right

Build a robot

17

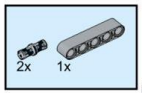

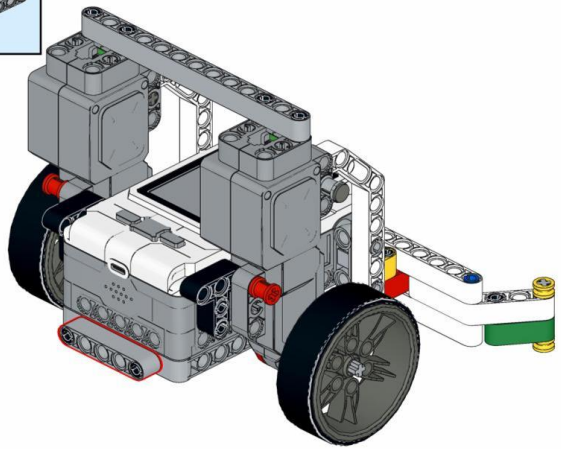

18

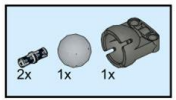

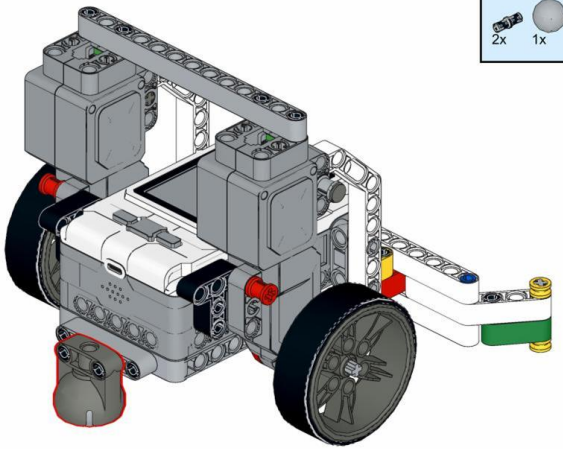

Build a robot

19

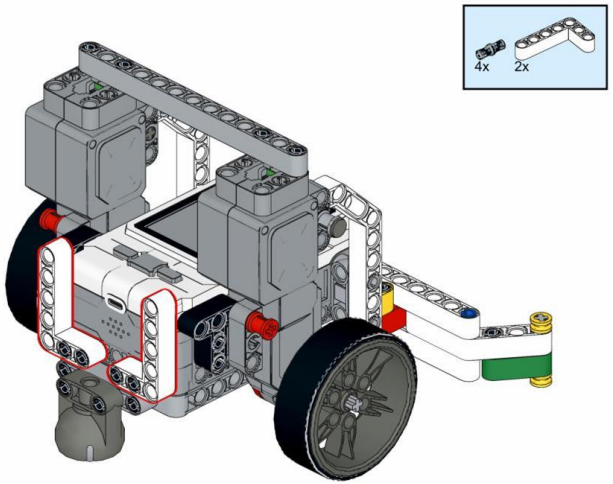

20

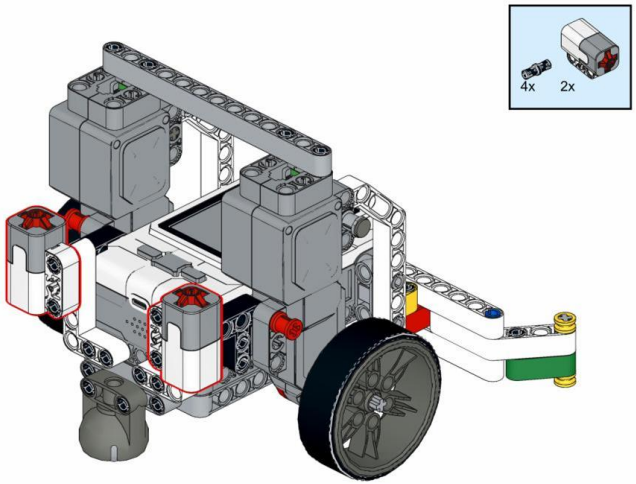

Install the touch sensor

Build a robot

21

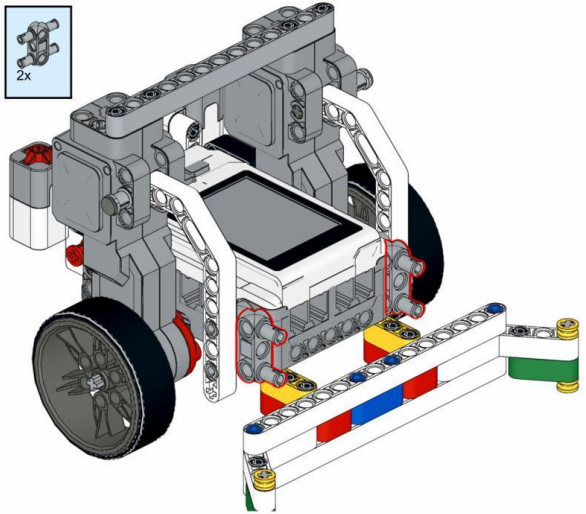

22

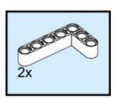

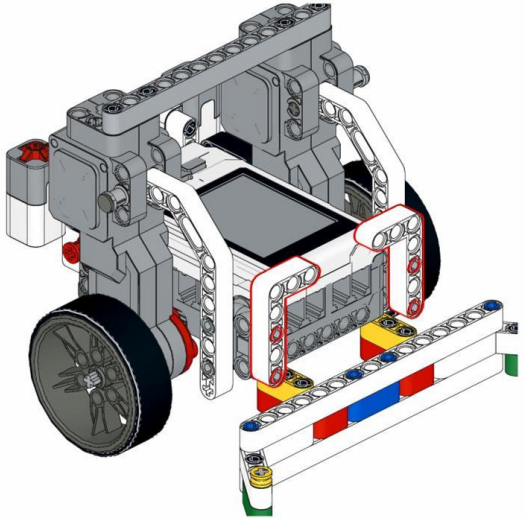

Build a robot

23

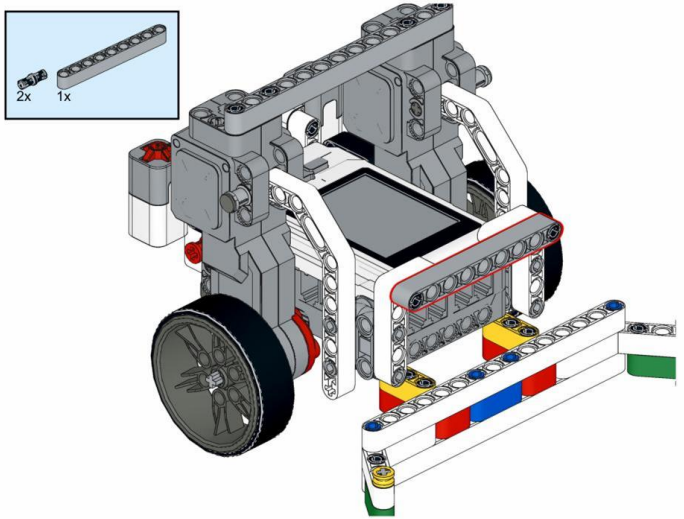

24

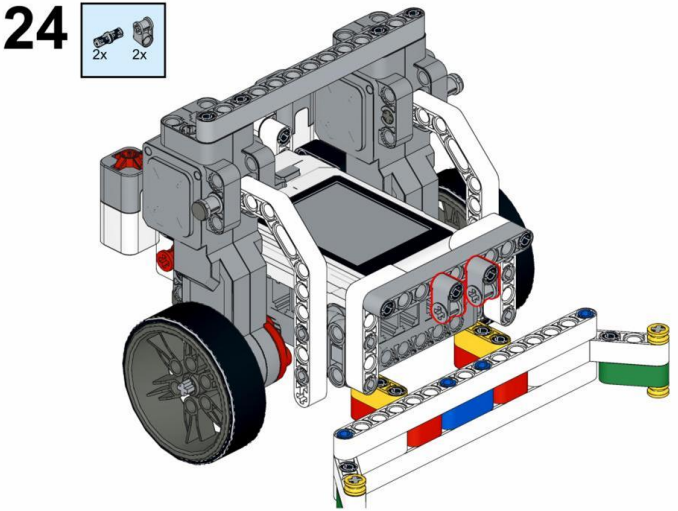

Build a robot

25

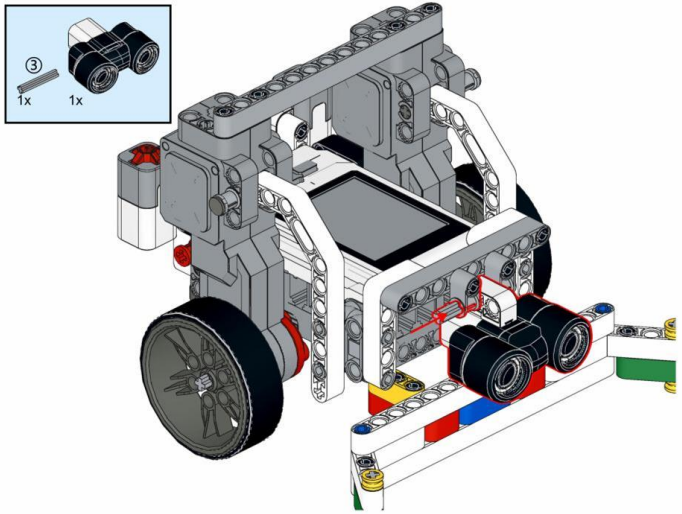

26

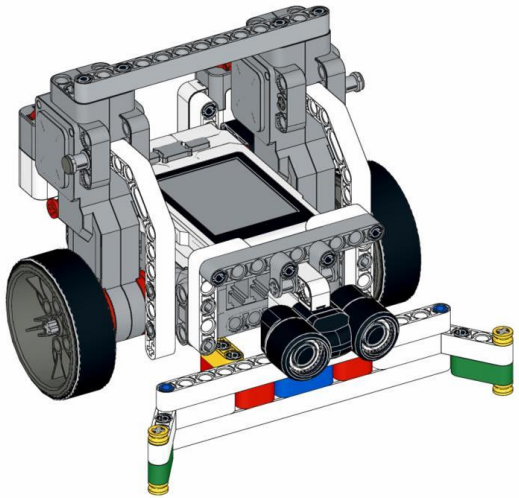

Install the ultrasonic sensor

Hardware Connection

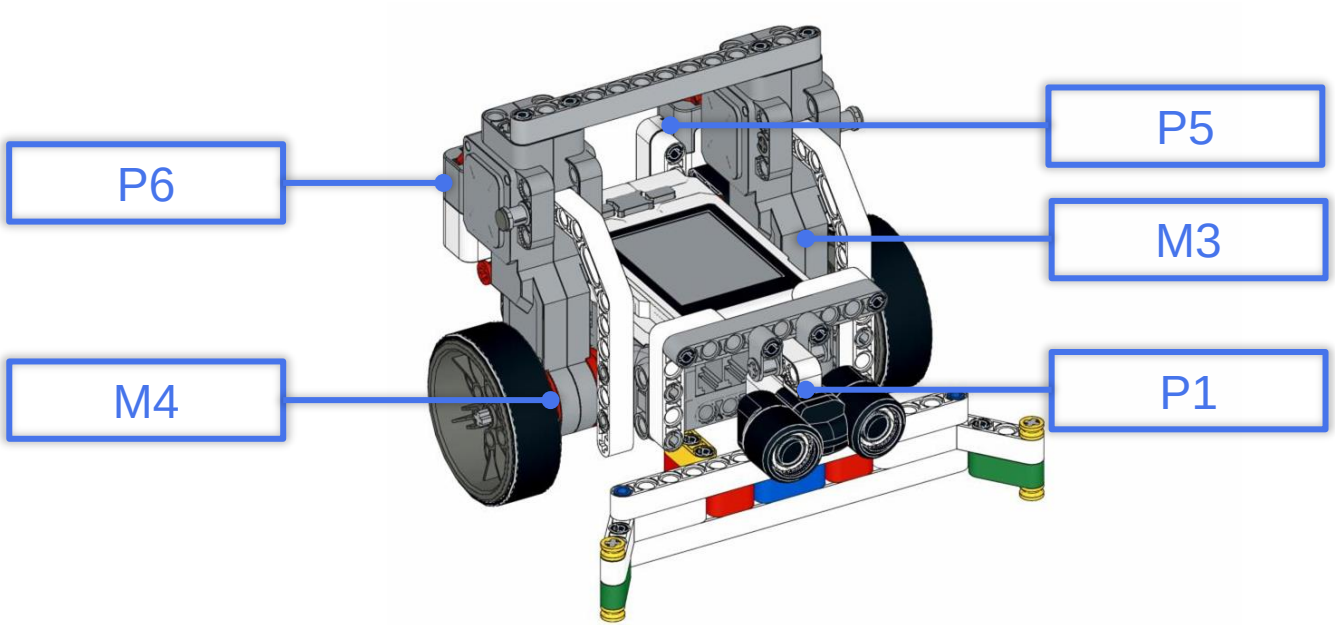

“

How do we achieve the required functions?

”

Motor power

Power is a physics concept that describes the amount of energy transferred or converted per unit time. In programming, the power of a motor can represent the speed of the motor rotation.

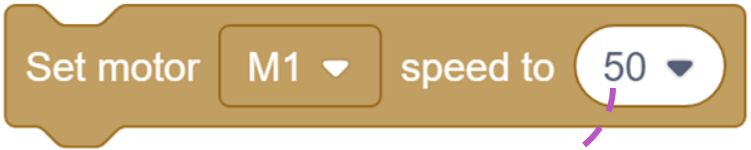

50% of the maximum power, that is, half of the maximum power.

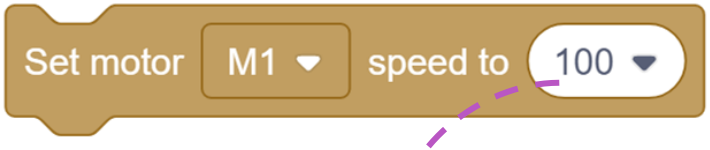

100% of the maximum power, that is, the maximum power.

Coding block - motor power

This module can be used to set the maximum power of the motor. It is mainly used to adjust the difference between motors and will be restored after restarting the controller.

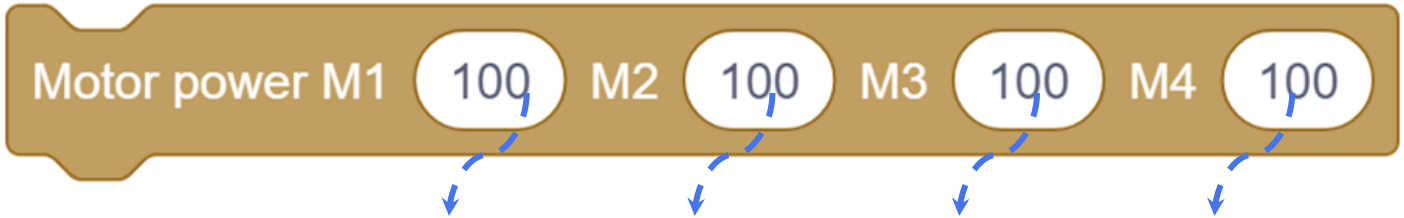

Maximum power percentage of M1 motor

Maximum power percentage of M2 motor

Maximum power percentage of M3 motor

Maximum power percentage of M4 motor

Set the maximum power of a single motor

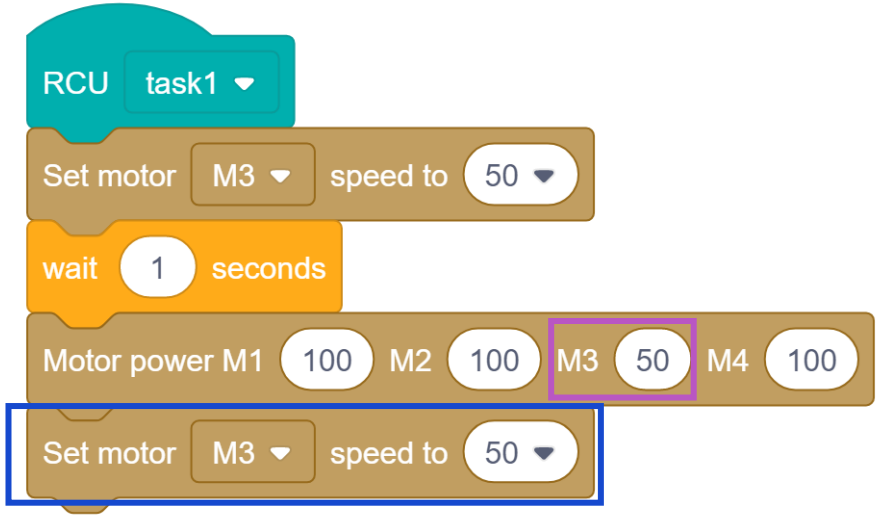

First, make the motor rotate 30 degrees forward and 30 degrees reverse. After rotating 30 degrees forward, text is displayed on the screen.

Download the program and run the test.



Change the direction of the motor

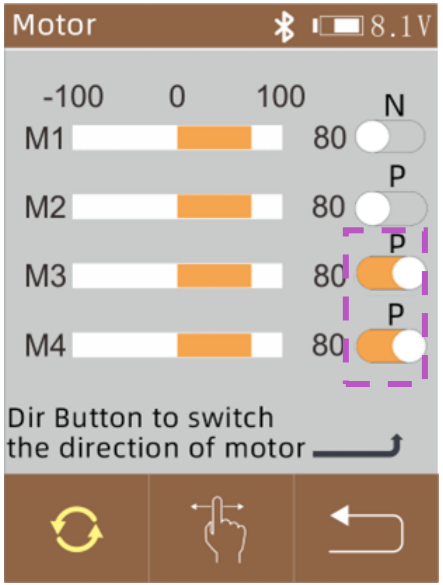

Enter the built-in test of the controller, click the “Motor” icon, and then set the direction of M3 and M4 to reverse.

1. Control the speed with the touch sensor button

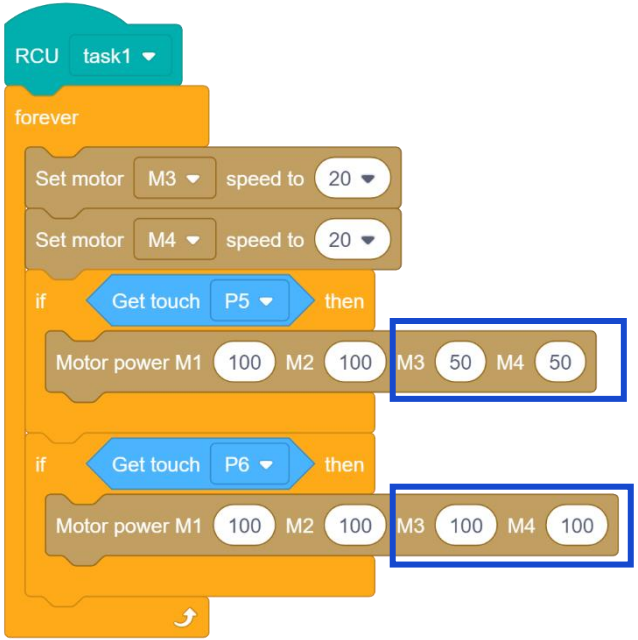

Use the left and right touch sensors to control the different maximum powers of the two motors respectively.

2. Stop the bulldozer when it encounters an obstacle

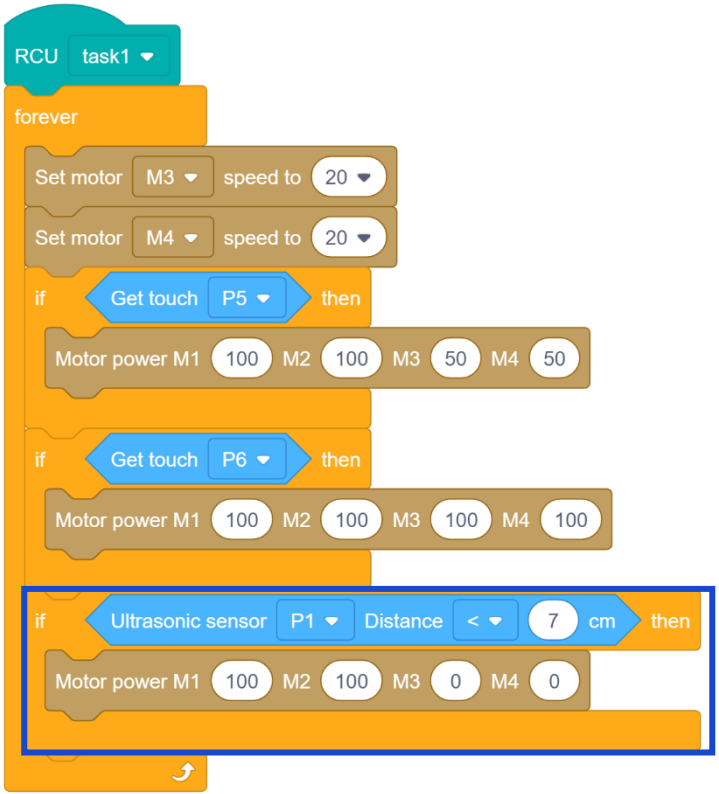

When encountering an obstacle, the maximum power is set to 0, which will stop the bulldozer from working.

3. Add text on the screen and add sound prompts

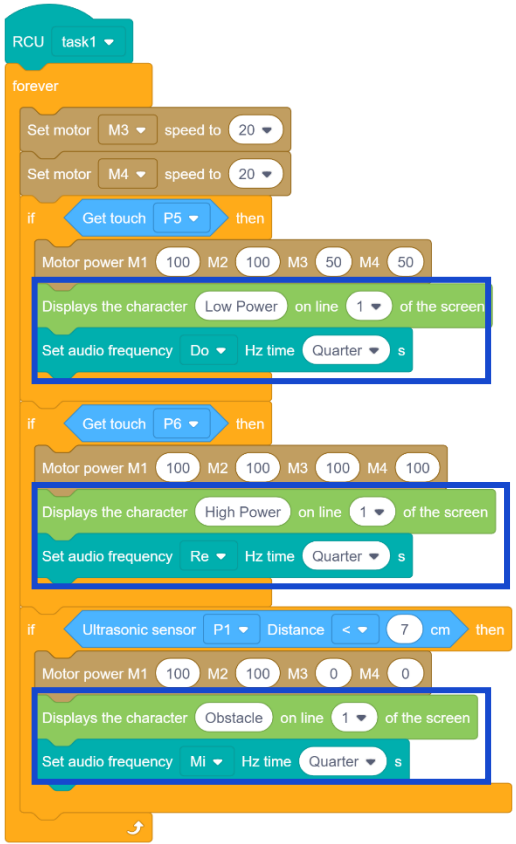

In different working states, the screen displays different texts.

When the touch sensor is pressed, the buzzer sounds once, and when an obstacle is encountered, the buzzer sounds continuously.

Expansion Tasks

Set different maximum powers for the left and right motors



Expansion Program

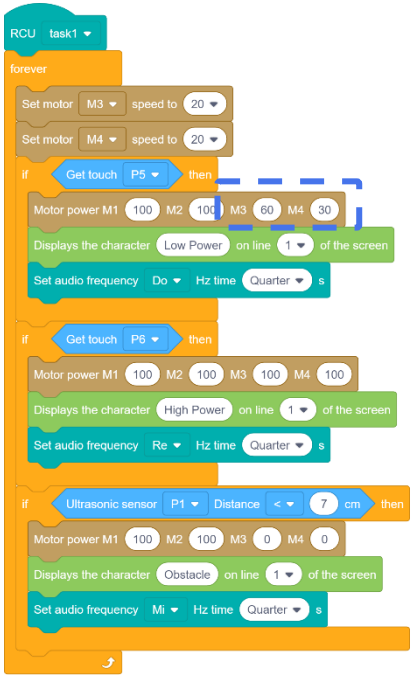

What will be the effect of setting the maximum power of the M3 motor and the M4 motor differently?

Quiz

Single-choice question

Regarding the power of the motor, the following description is correct ( )

A. Power is a physics concept that describes the amount of energy transferred or converted per unit of time.

B. The maximum power can be set to 200%

C. The greater the power, the faster the speed

D. Power is speed

Answer: C

Further Reading



Bulldozers can dig, transport and discard rock and soil. They are widely used in many fields such as construction sites, mining and quarrying, agriculture, road construction and geological exploration. They are very important construction tools.

Further Reading



Bulldozers can be divided into two types according to their walking mode: crawler type and tire type. Crawler bulldozers have good adhesion performance, large traction, small ground pressure, strong climbing ability, and can adapt to harsh working environments. Tire bulldozers have fast driving speed, good maneuverability, short operation cycle time, convenient and rapid transfer, and do not damage the road surface. They are particularly suitable for use in urban construction and road maintenance projects. However, the adhesion performance of tire bulldozers is not as good as that of crawler bulldozers. When working on soft and wet sites, the drive wheels are prone to slip, reducing production efficiency.

Thanks!