Learning Series
Scaling Ladder

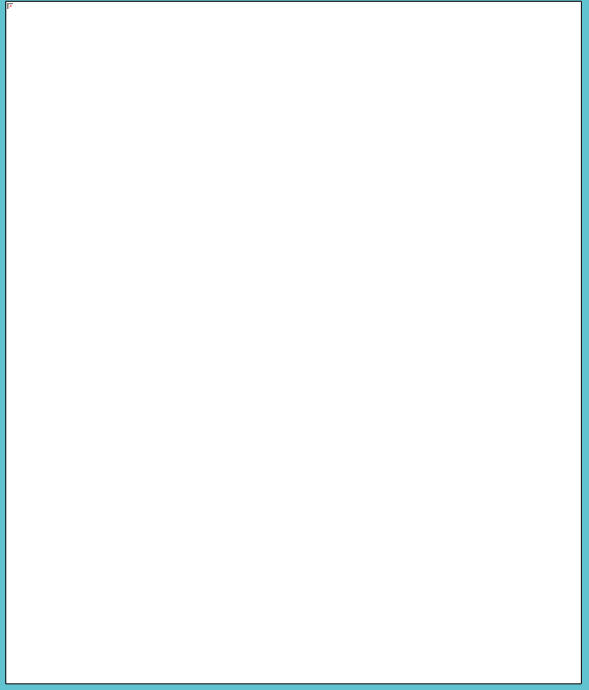

This robotics kit is a building block programming robot research and development by Joinmax.

The kit is equipped with various sensors such as sound sensitivity, color sensor, touch sensor, photoelectric sensor, color light, ultrasonic, camera and many building blocks parts. Students can build various building block robots with their imagination, and use graphical programming software to program the robot and experience the joy of hands-on creation.

Learning Target

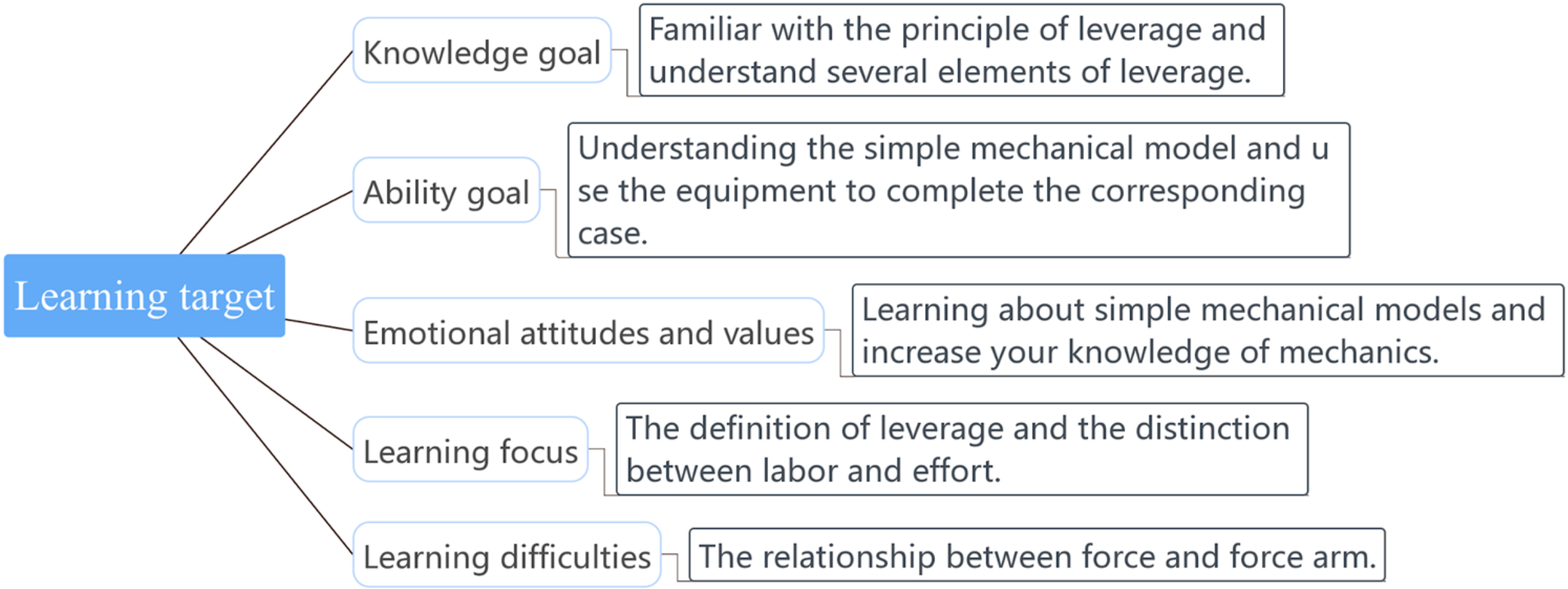

Contents

1 Course introduction

2 Teaching new knowledge

3 Task practice

4 Test effect

Course Introduction



Course Introduction



The picture above uses a screwdriver (opener) to open the beverage bottle. It is also the principle of using leverage.
Which type of lever is this?

Have you discovered that the pivot point of this kind of lever is not the same as what we have said before?

The force and the arm are all on the side of the fulcrum. So how should we perform mechanical analysis of this type of leverage? Can you draw a force analysis diagram of it?

Course Introduction

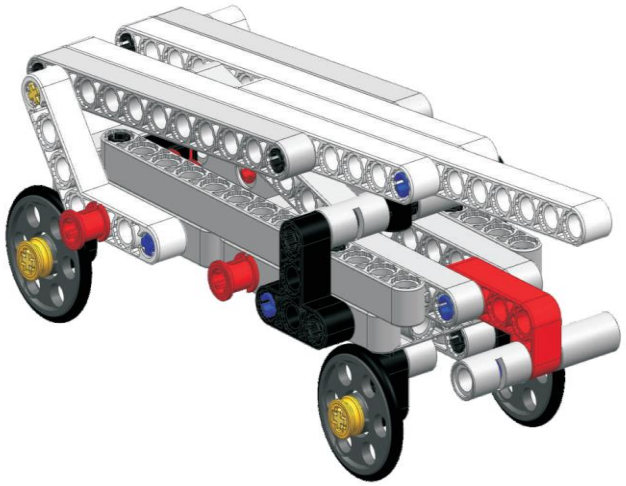

Scaling ladder

Know about the Scaling Ladder

In fact, for the lever structure, the lever has no fixed shape, and the screwdriver is a form of conventional lever.

The robot we are doing today is also a kind of extension using the principle of leverage. In the following study, let's take a good look at how the lever is deformed.

Teaching New Knowledge



Teaching New Knowledge

Deformation of the lever: The deformation of the lever includes the pulley, the axle and the gear.

Although they have different external manifestations, they can be used to obtain the elements of leverage and the corresponding relationship through mechanical analysis.

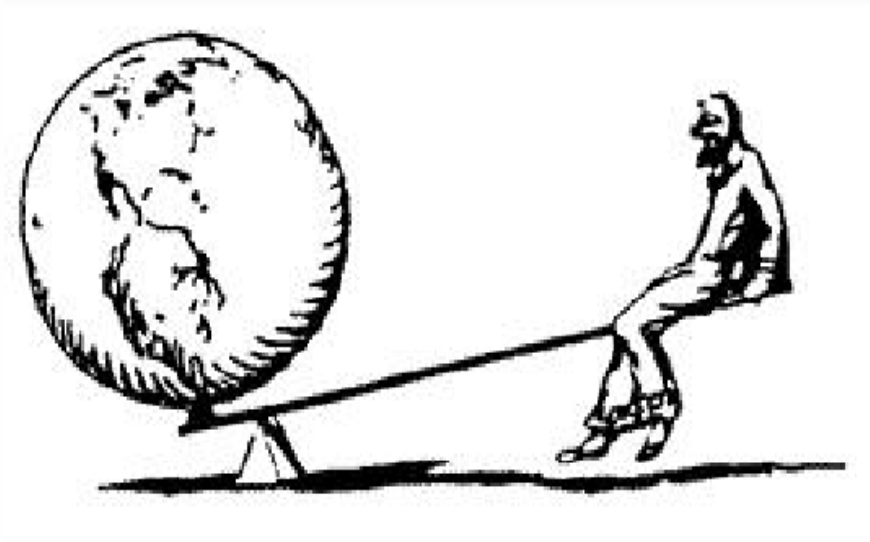

Teaching New Knowledge

In mechanics, a typical pulley is a circular wheel that can be rotated about a central axis.Its central axis is the fulcrum, the power and resistance are in the direction of the rope, and the force arms are the radius of the round wheel.

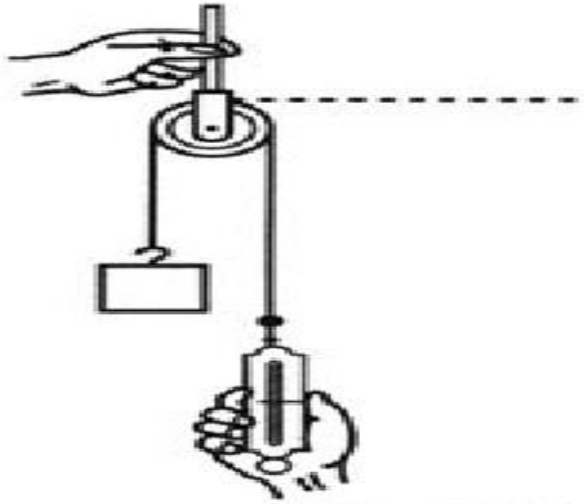

Teaching New Knowledge

The axle, as the name suggests, is a system of "wheels" and "axes."The system can rotate about a common axis, which is equivalent to a lever system with a shaft as a fulcrum and a radius of the rod.

A gear is a mechanical component that has a gear on the rim that continuously meshes to transmit motion and power.The shaft is the fulcrum and the arm is the wheel diameter.



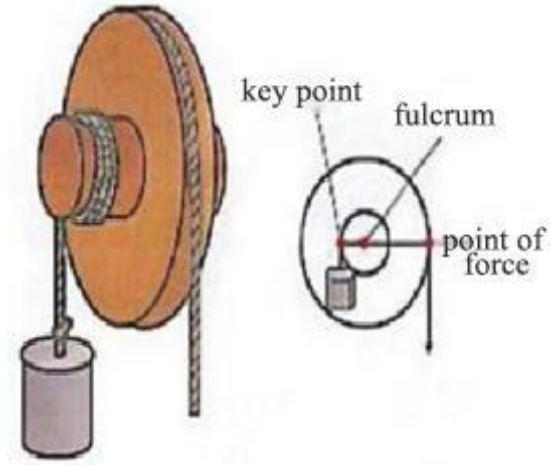

The axle is the lever between the point of force and the fulcrum.

Teaching New Knowledge

When the power arm is larger than the resistance arm, this is a labor-saving lever; the power arm is smaller than the resistance arm, which is a laborious lever; when the power arm is equal to the resistance arm, this is an equal-force lever.







Teaching New Knowledge

Lever balance: Lever balance refers to maintaining balance when the lever structure remains stationary or at a constant speed.

formula:

F1*L1=F2*L2

When the fulcrum is fixed, the power is inversely proportional to the power arm, which can be understood as the power arm.

The longer the lever structure, the less effort.

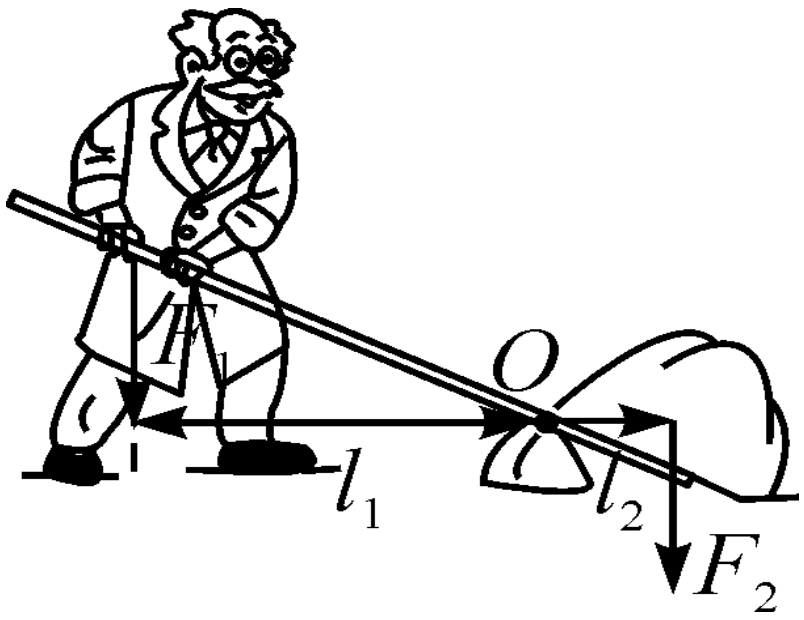

Task Practice



Task Practice

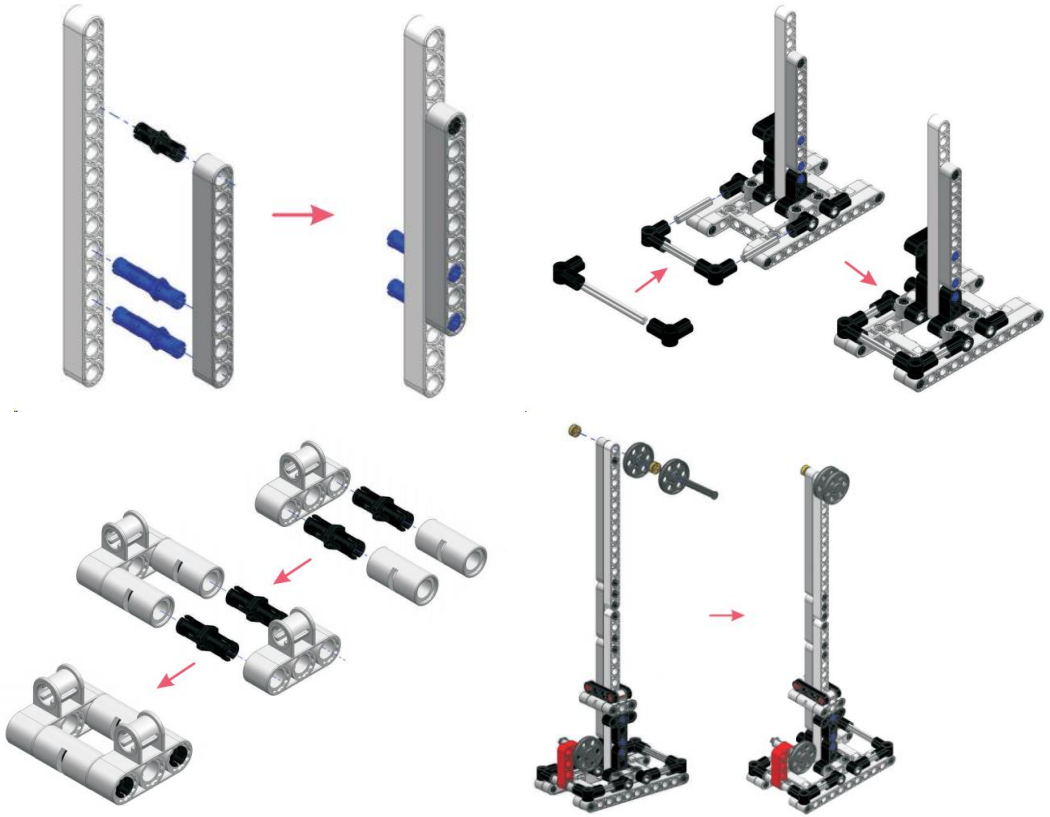

Assembly requirements

①Stable structure

②Proper gravity

③Shape match

Checking Effect



Test Effect

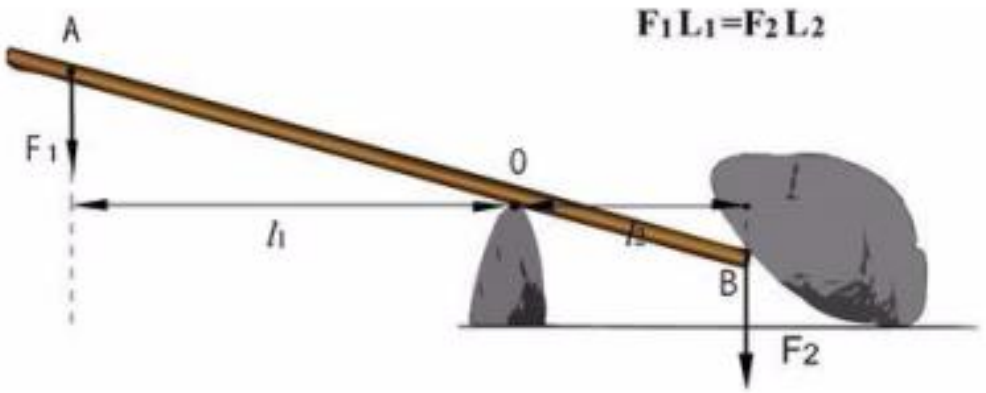

As shown above, the weight of the object is 50N, the length of the resistance arm is 40cm, and the length of the power arm is 50cm. What is the minimum force required to lift the weight?

Solution:

F1*L1=F2*L2

F1*50=50*40

F1=40（N）

Test Effect

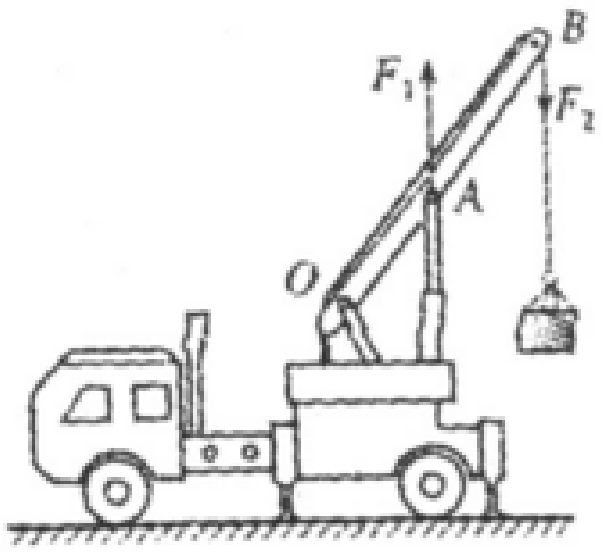

As shown above, F2 is 1000N, OA length is 2.5m, and OB length is 5m.
Please draw the force analysis of the above figure and calculate the size of F1?

Solution:

F1*L1=F2*L2

F1*2.5=1000*5

F1=2000（N）

Thank you for watching

BE STEM READY

