Hand-cranking Fan

Hand-cranking Fan

Basic Teaching Information					
Teaching facility	AI Module 1	Teaching mode	Project-based learning	Class duration	90 minutes

Teaching Objectives

In this lesson, by learning the course and under the guidance of the teacher, the students shall:

- Understand the gear’ s characteristics
- Understand the gear’ s types
- Understand the role of gears
- Understand the application of gears in mechanical transmission

Key Points and Difficulties

- Build hand-cranking fan correctly
- Focus on the transmission principle and function between the gears
- Correctly understand the building sequence

Hand-cranking Fan

Step 1 Introduction of the Topic

Hello everyone, welcome to Wanchuang stem lesson. Summer has just passed. Wasn’ t it hot?

T1: How did you cool yourself off during the summer? You are very lucky, but there is a child named Nini who is not so lucky, why? Because she lives in a very remote mountainous area where has not been accessed to electricity. She has not seen a fan that can be turned on when power is on, nor has she seen air conditioning. How does she get through such a hot summer?

S1: Air conditioner, electric fan

T2: Is there a fan that can be turned on without electricity? Think about any way to help Nini?

S2: A manual fan, to wave a fan

Ask the students to speak their minds.

1.Ask the students if they have a fan at home?

Ask the students to speak their minds.



Step 2 Topic Analysis

- Design the shape of the fan

Guide the students to design their own fan on the blackboard

- What parts does the fan consist of
- What pieces can be used to build such a fan

Hand-cranking Fan

Step 3 Start the Hands-on

Guide the students to build a hand-cranking fan and explain the gearing structure therein.

Step 4 Contents Assessment

Post-class summary, which can be reflected by multiple choices or true or false questions as far as possible, other than gap filling or questions.

For example, what is the structure of the hand-cranking fan we did today,etc., to emphasize the knowledge.

Step 5 Display of Outcomes

Ask the students to present their outcomes to their parents.

Introduce what we did today? Hand-cranking fan!

What principle does it apply? (transmission, gear shifting)

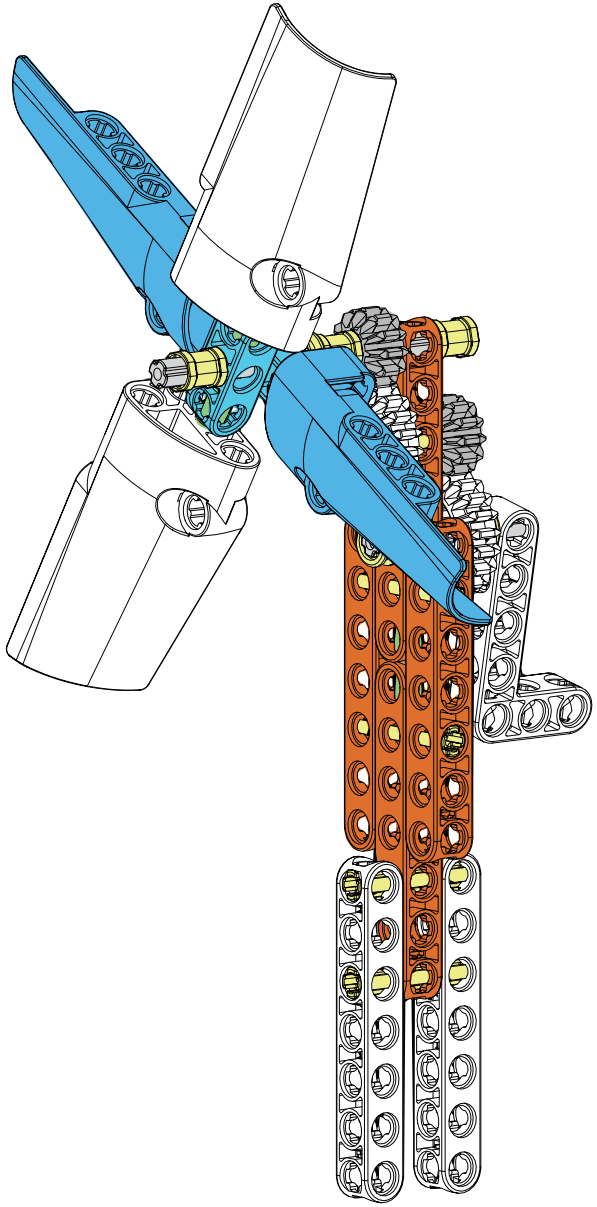

Hand-cranking Fan

1

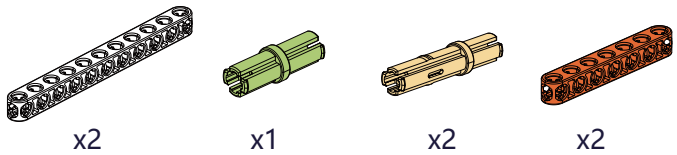

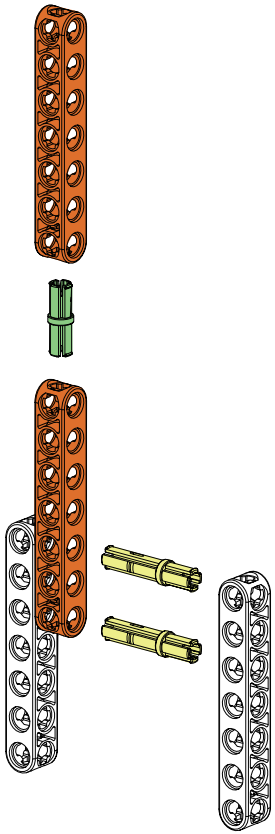

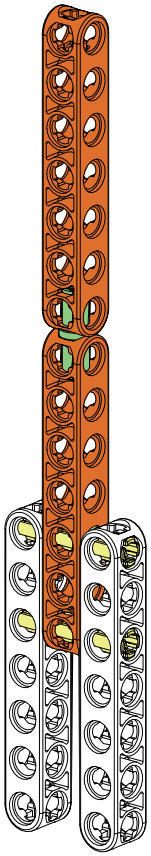

Hand-cranking Fan

2

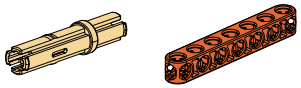

x2 x2

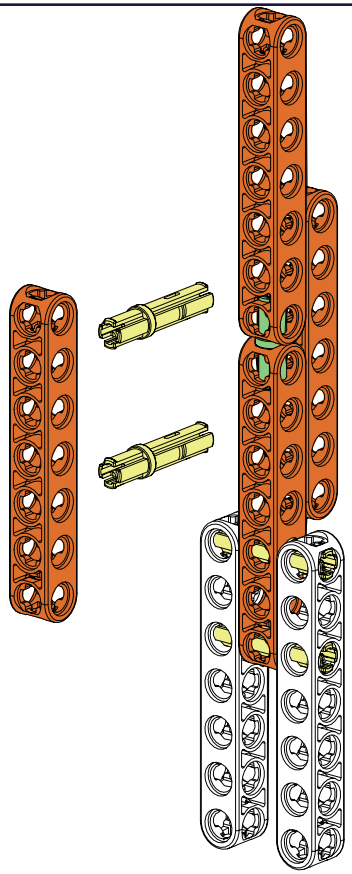

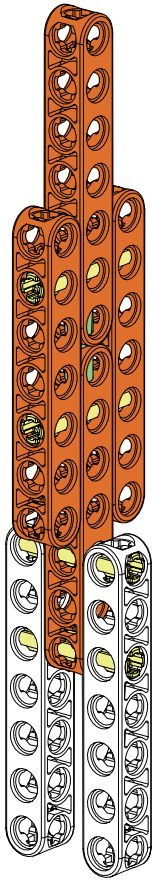

Hand-cranking Fan

3

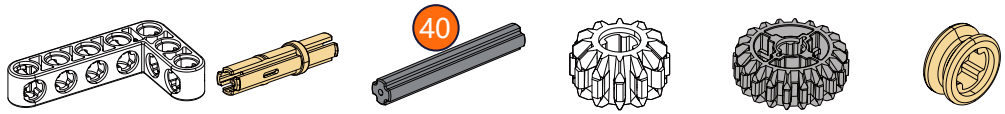

x1 x1 x1 x1 x2 x2

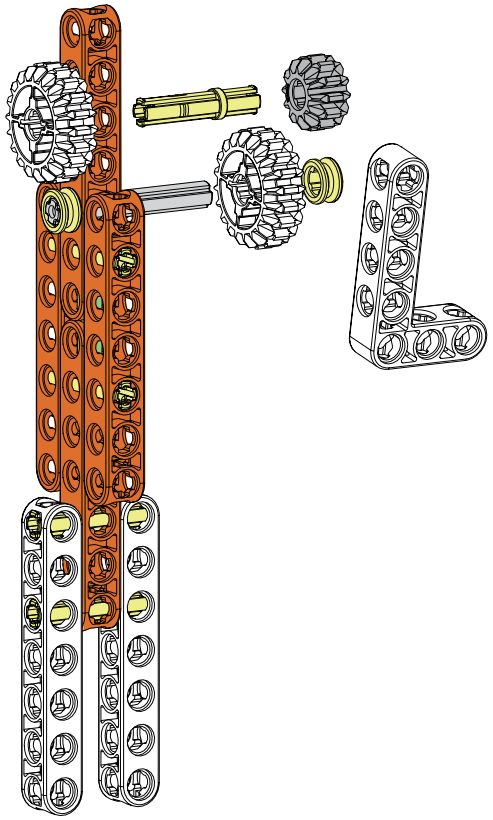

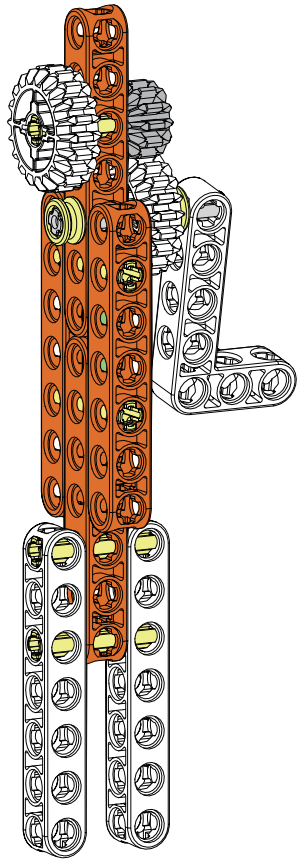

Hand-cranking Fan

4

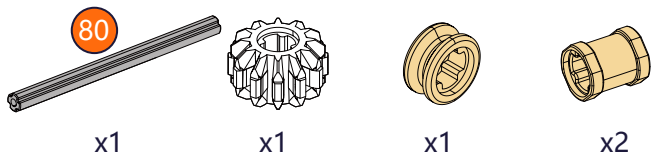

x1 x1 x1 x2

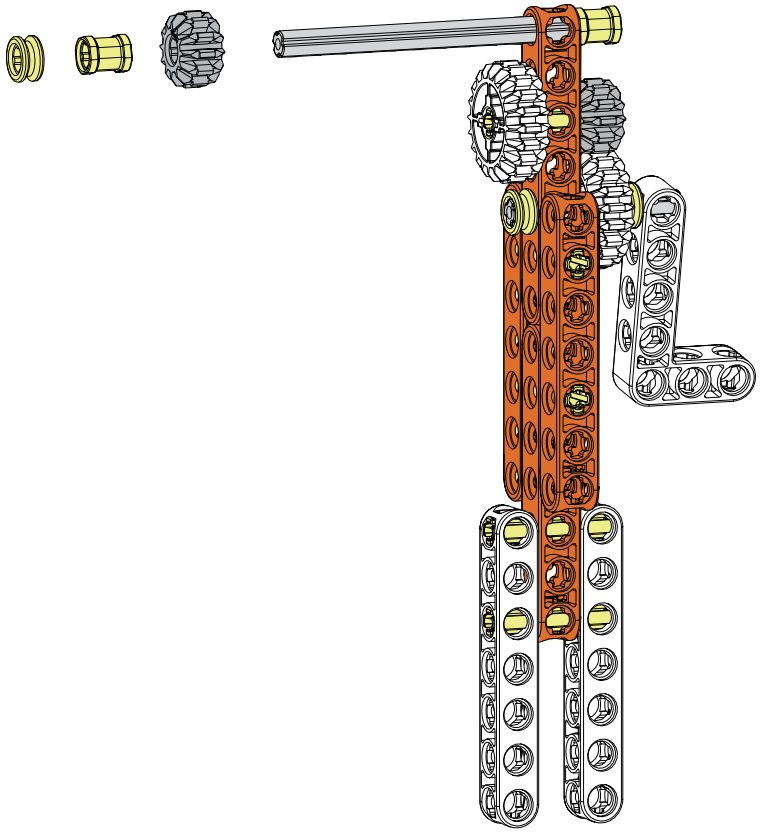

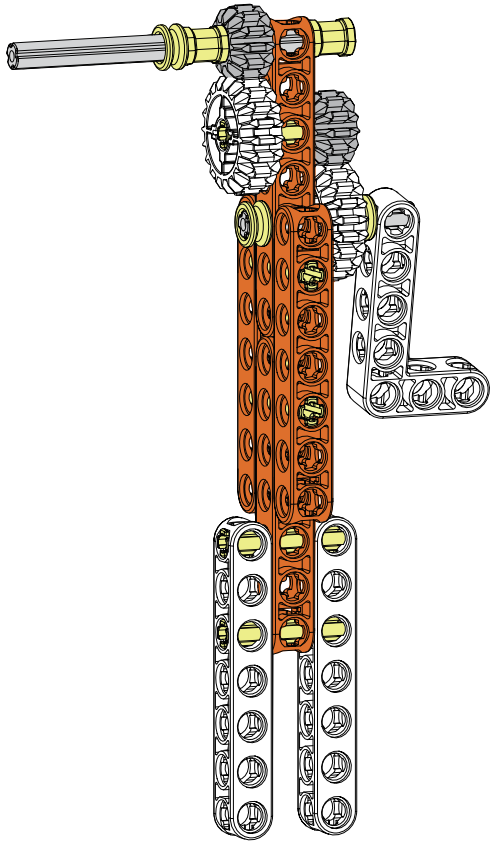

Hand-cranking Fan

5

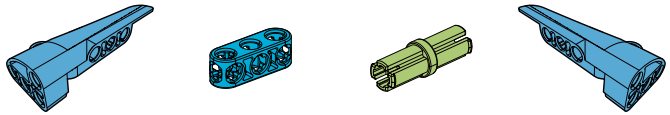
x1

x1

x2

x1

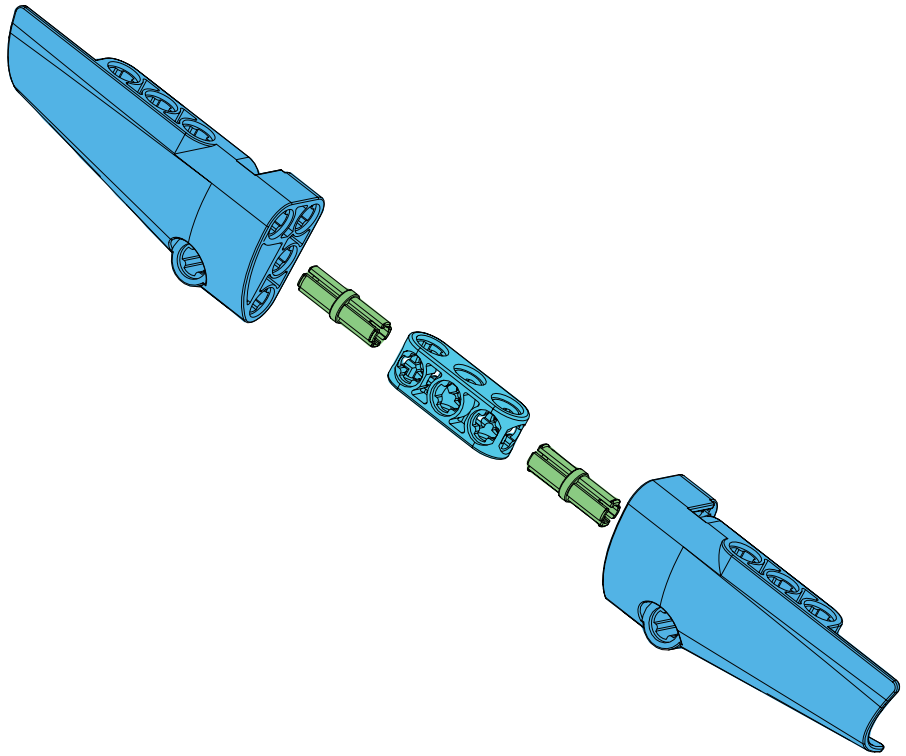

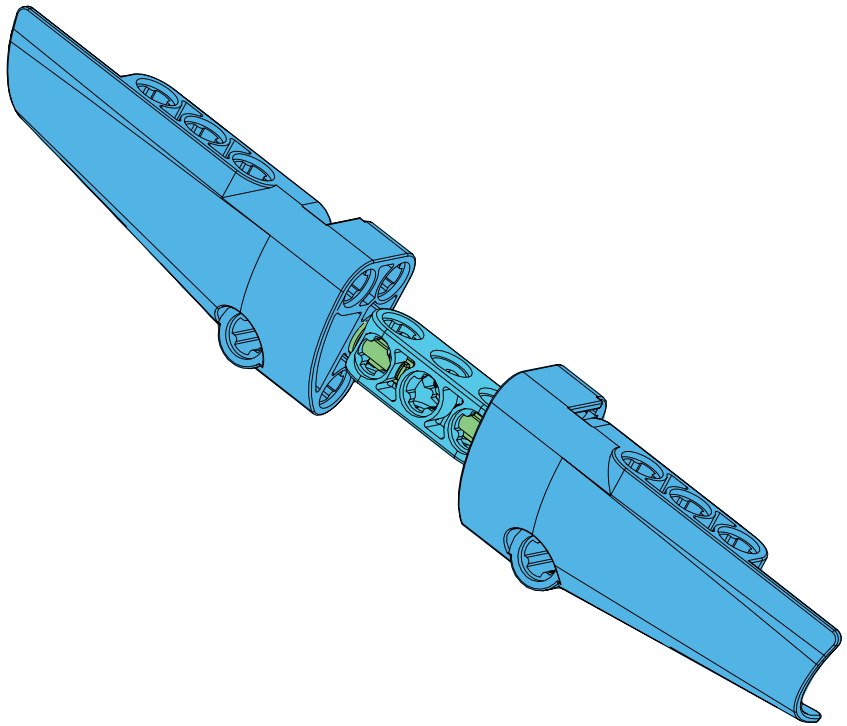

Hand-cranking Fan

6

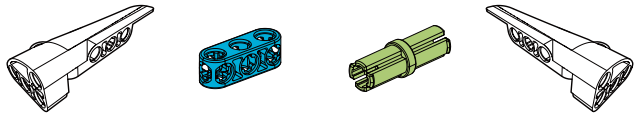

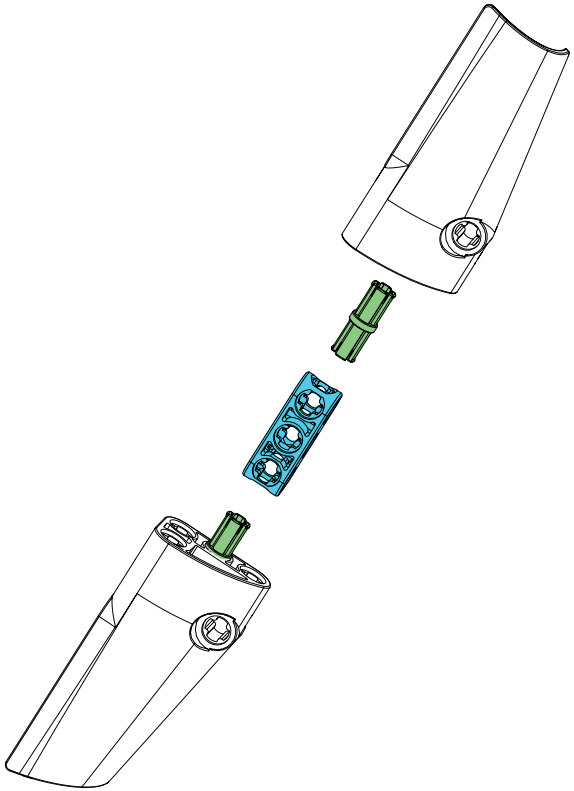

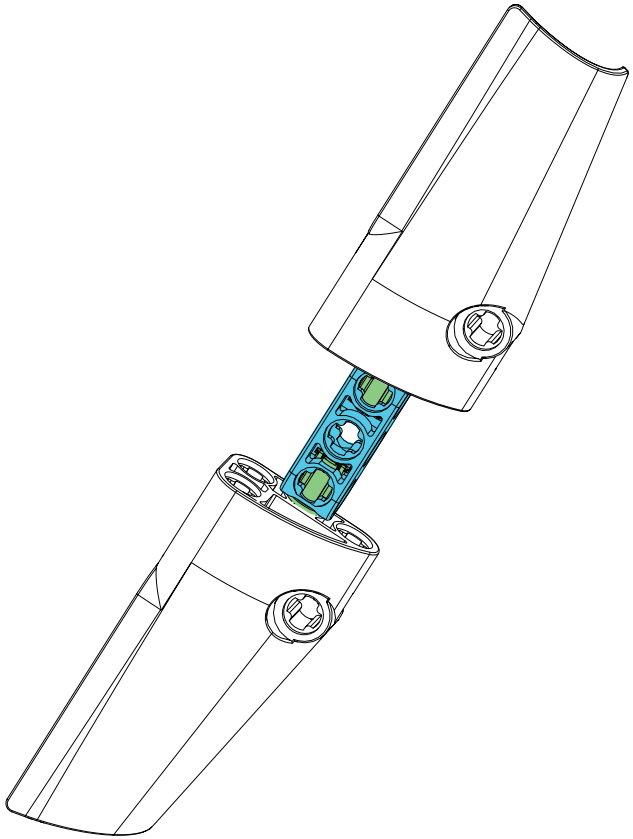

Hand-cranking Fan

7



x1

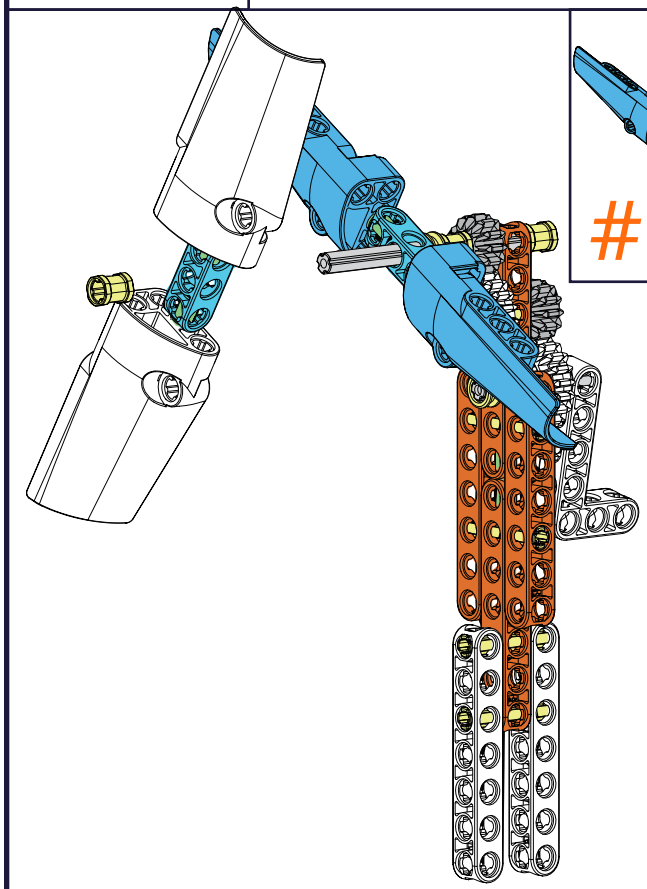

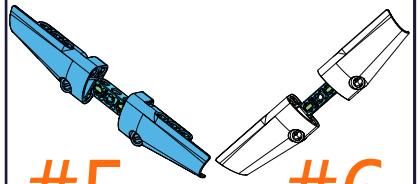

#5 #6

