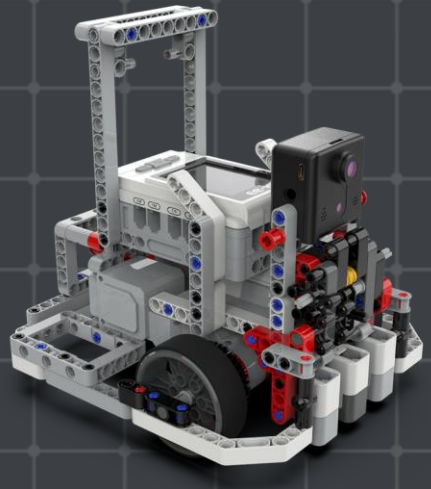

Lesson 1 | Hello, World |

Key points from this lesson:

1. Get a basic understanding of the functions and features of the E6 controller

2. Learn how to write programs by dragging programming modules

Possible difficulties from this lesson:

1. Be familiar with the basic operation of programming software

2. Master the methods of downloading and running programs

Learn about programming

Programming is integral to modern technology, allowing electronic devices such as computers and smartphones to operate and perform tasks according to our wishes. Similarly, electronic toys, logistics robots, self-driving cars, and other products also need programming to operate.



Computers and smartphones



Electronic toys

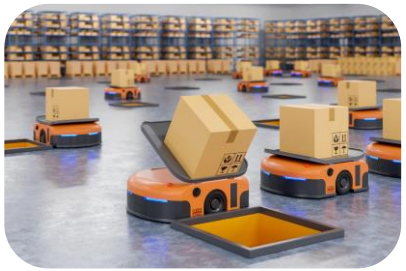

Logistics robots



Self-driving cars

Hello World!

When we learn programming, we usually start with the simplest program, which is to output a sentence, usually "Hello, World!".



The Origin Of Hello World

It can be traced back to Bell Labs in the early 1960s. At that time, Ken Thompson and Dennis Ritchie were developing the C language and testing their compiler. To verify whether the compiler was working properly, they wrote a simple program that outputs "Hello, World!" This program became a classic example of demonstration programming and was widely used in introductory tutorials.



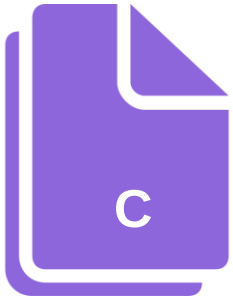

Format of Hello World

The original output "hello, world" used a standard format by default, but it is now rarely seen following this format completely.

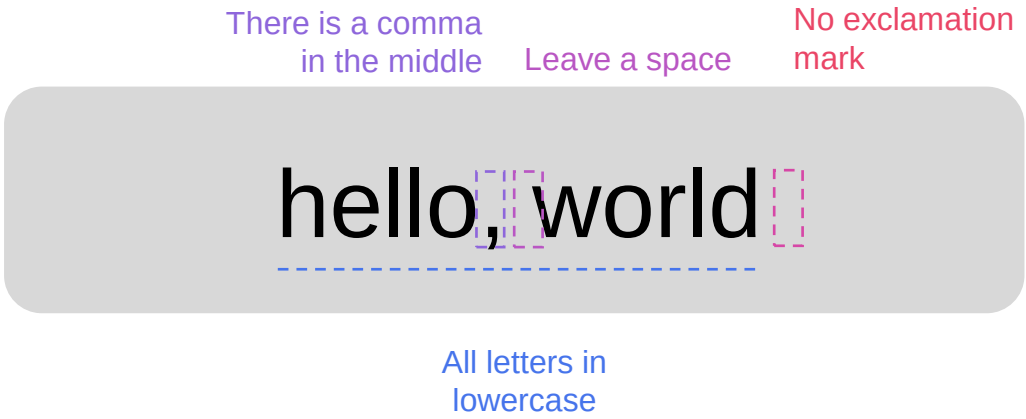

Effect Demonstration



Project Tasks

Design a robot model and display information on its screen.

Requirements for robot functions:

1. Display "Hello world" in English on the first line of the screen
2. Display "Welcome!" on the second line of the screen

Get To Know The Controller

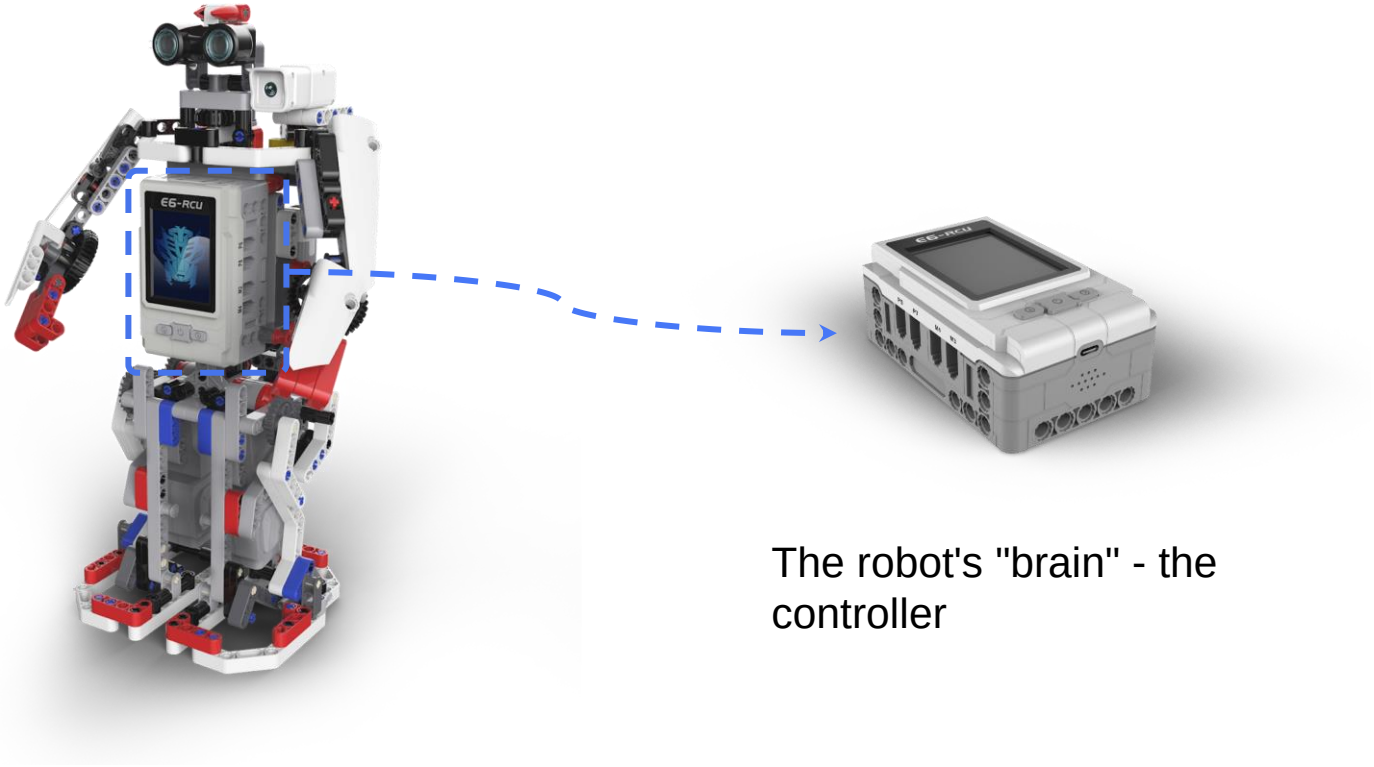

The robot's "brain" - the controller

Functions of the controller

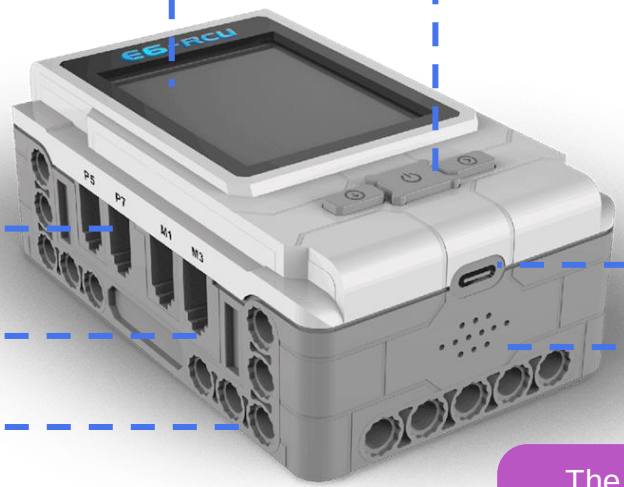

The controller has a built-in test interface, sound sensor, buzzer, MP3 module, Bluetooth module, local data storage, and timer.

Controller Screen



The 3.2-inch screen can display numbers, characters, pictures, and shapes.

Build a robot

1

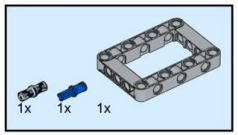

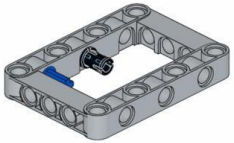

2

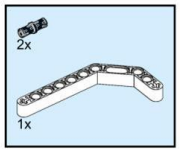

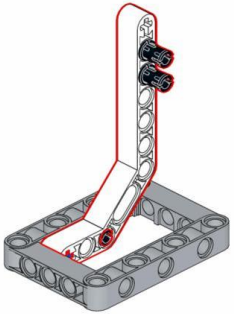

Build a robot

3

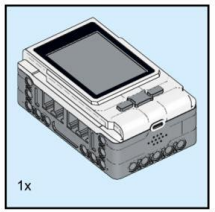

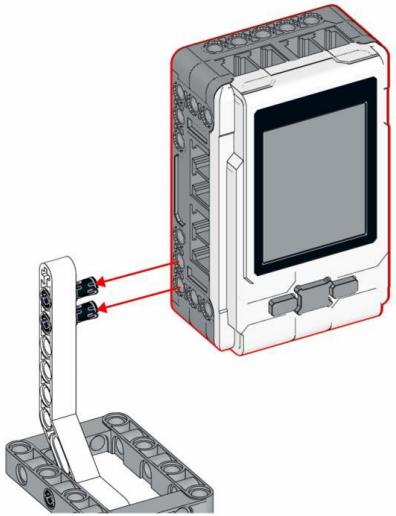

4

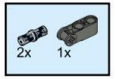

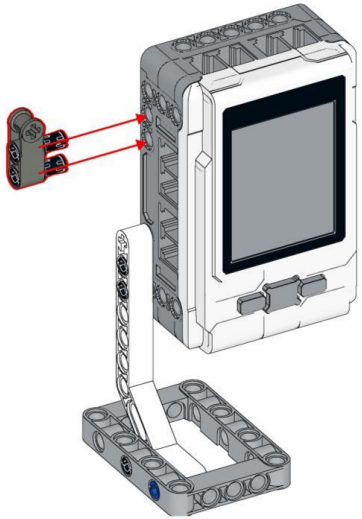

Installing the controller

Build a robot

5

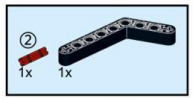

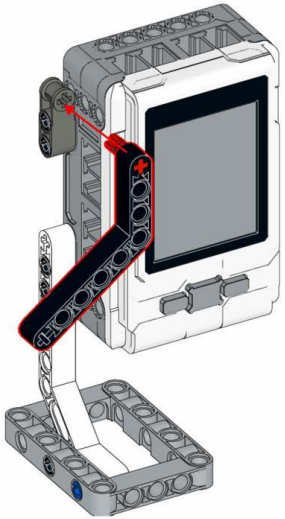

6

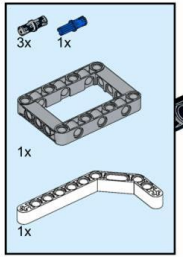

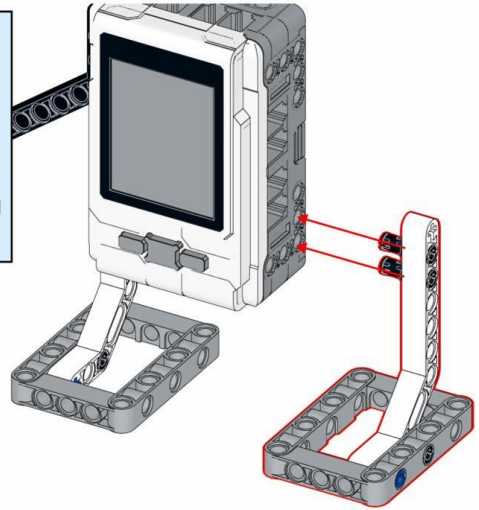

Build a robot

7

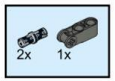

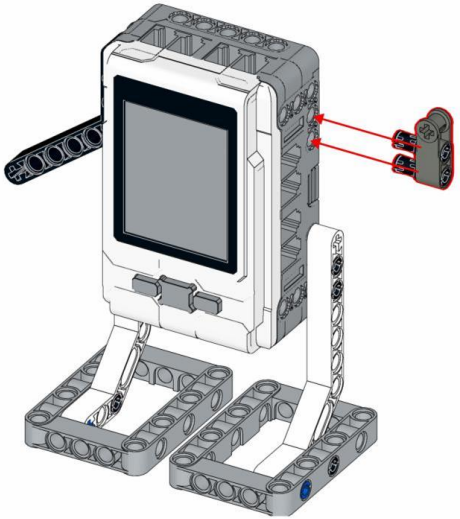

8

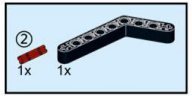

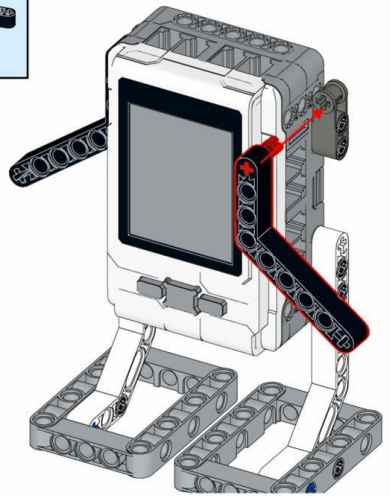

Build a robot

9

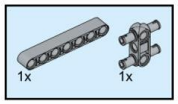

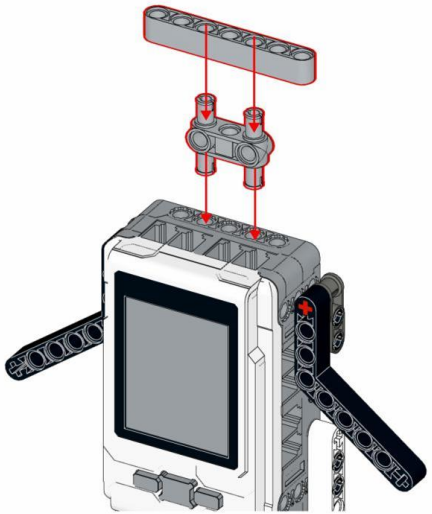

10



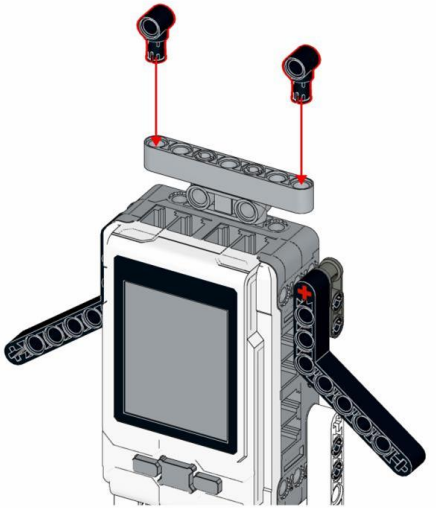

Build a robot

11

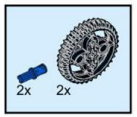

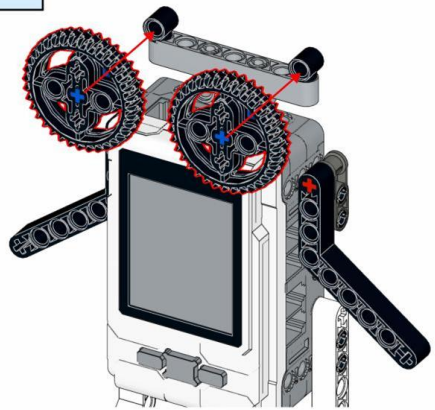

12

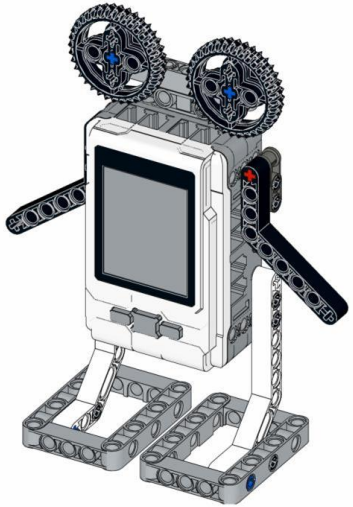

Simulating robot eyes with gears

“

How can I communicate with a robot?

”

The language of machines

The machine cannot directly understand human words. It only recognizes the two numbers 0 and 1.



Language Translation

A paragraph of text

Translation software

Text in the target language

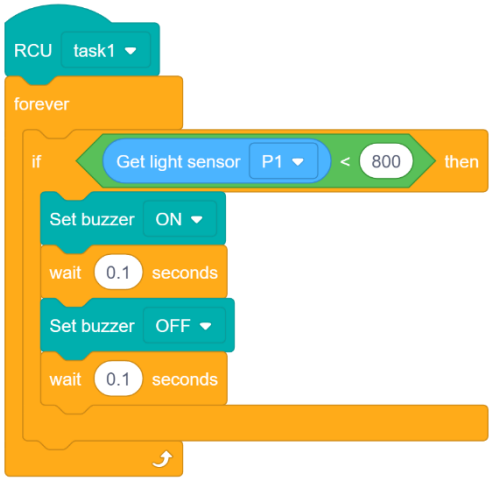



ZMROBO3.0 software

00100101010101010101
10101010010101010000
001010.....

Interface of ZMROBO3.0

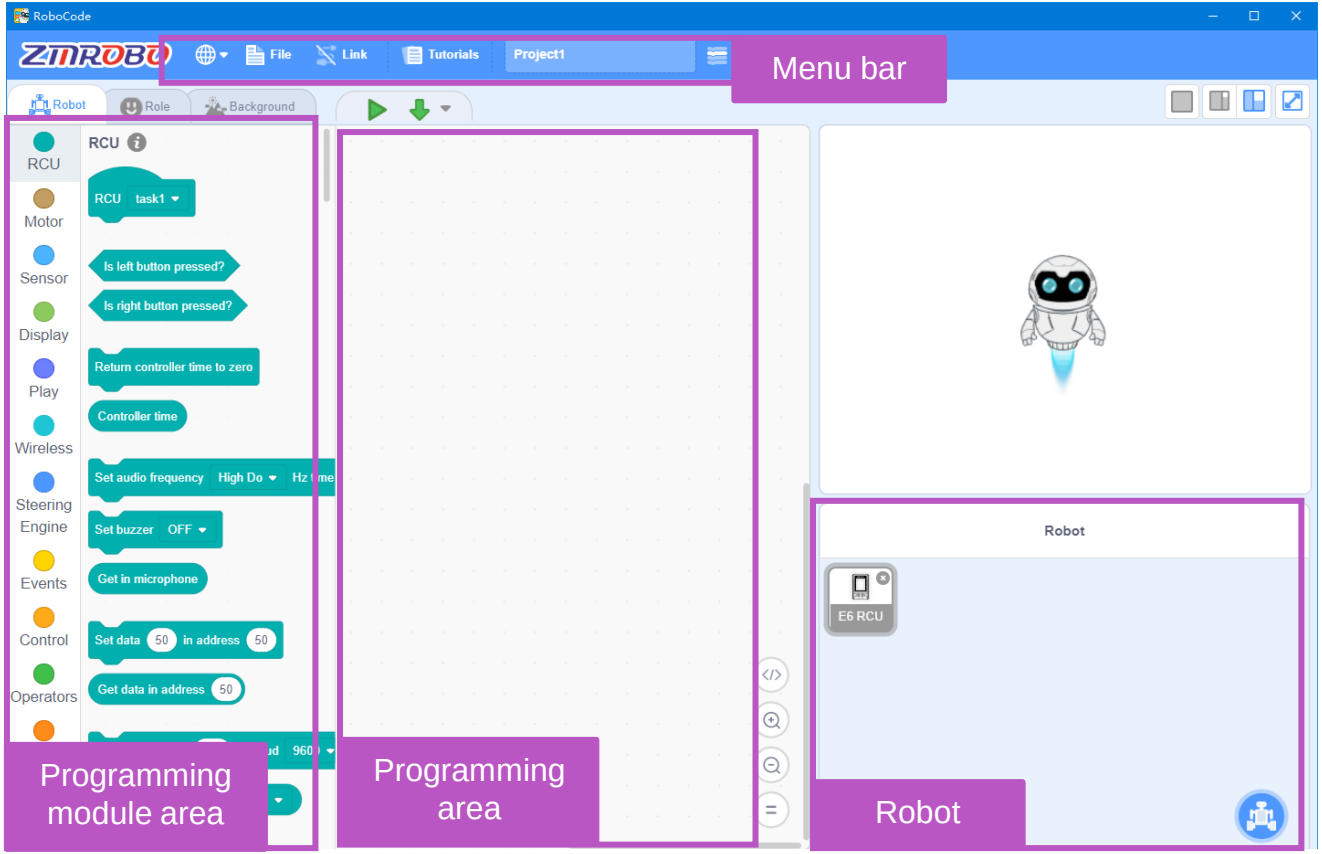

Programming preparation - select a controller

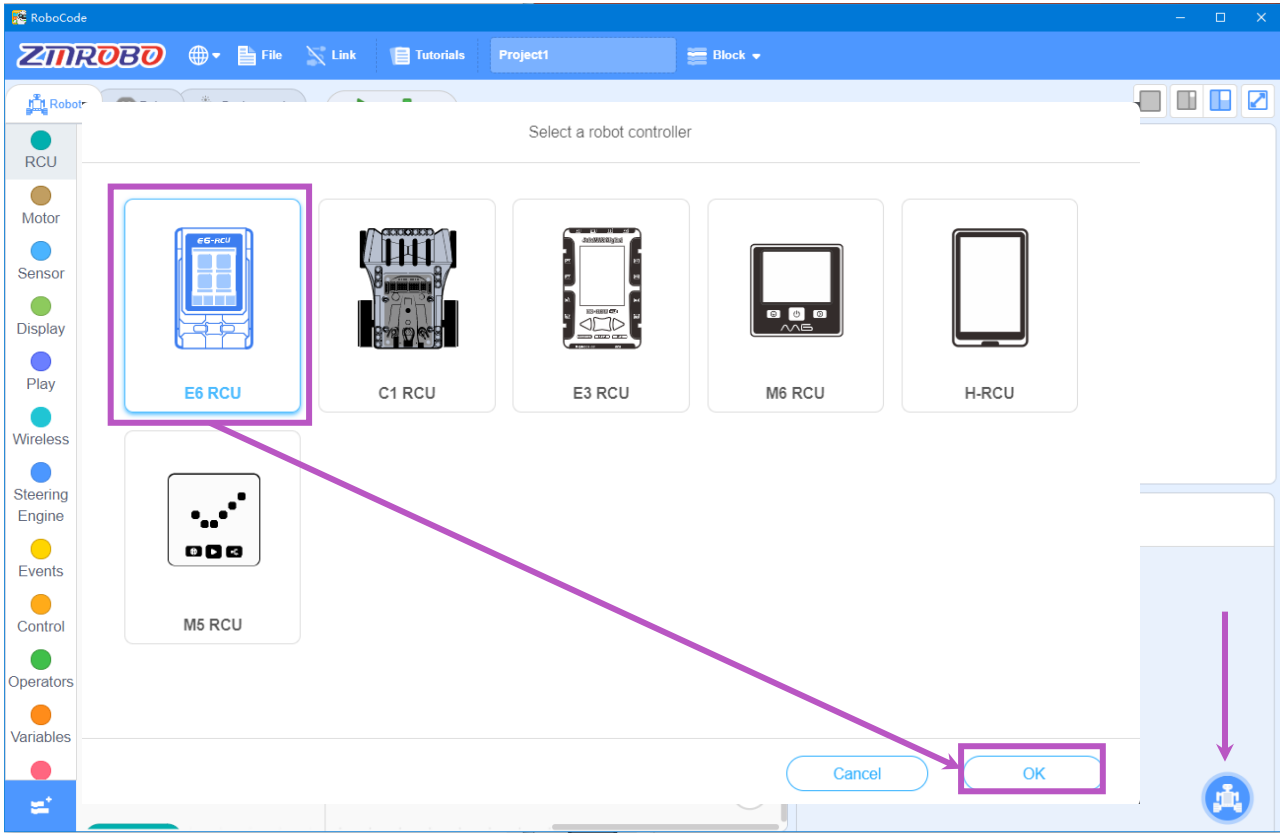

RCU Task - Coding Block

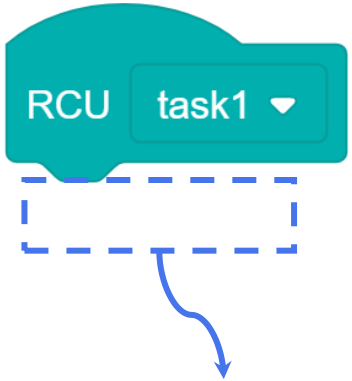

Connect the program to be run

The program starts with the RCU (task 1) coding block. When running the program, the coding blocks below the RCU (task 1) will be executed.

Drag coding blocks

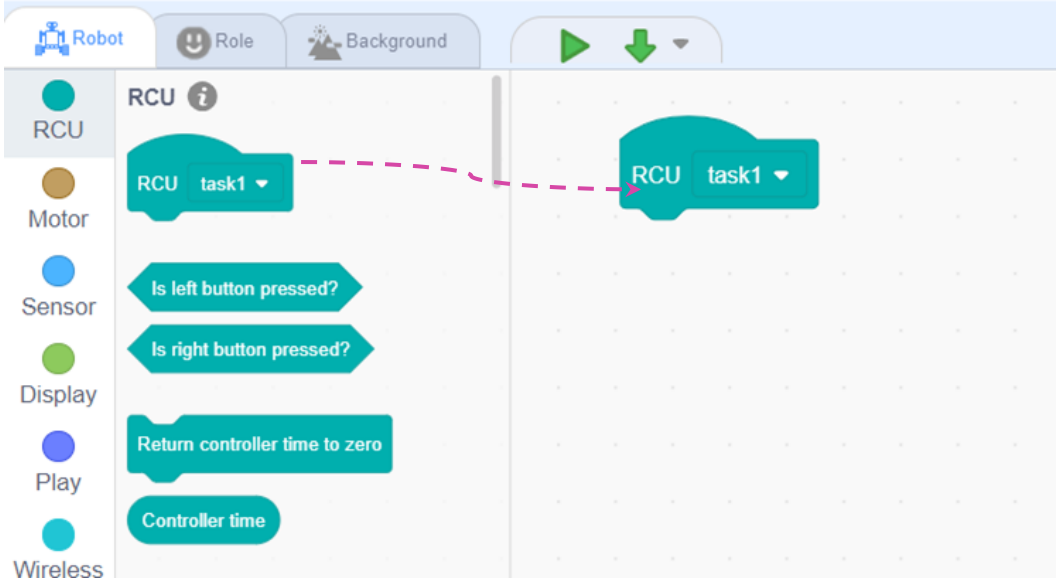

Please find the “RCU task 1" coding block and drag it to the programming area by holding down the left mouse button.

Splice Coding Blocks

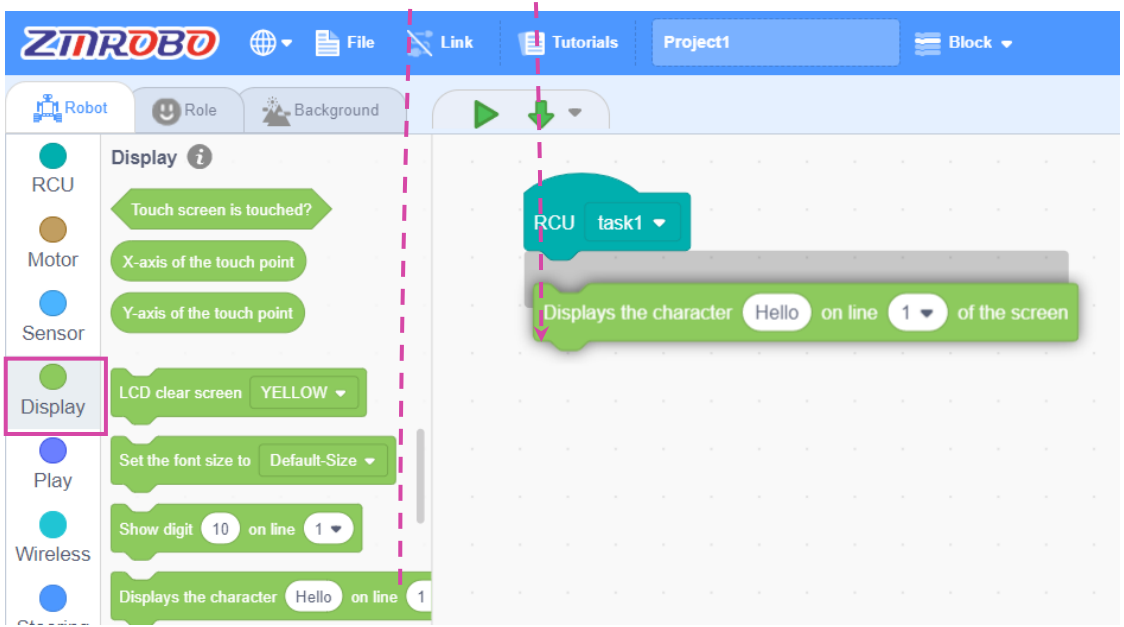

Please find the “Displays the character (Hello) on line (1) of the screen” module, and then drag it below the “RCU task 1".

Example For Splicing Coding Blocks











Edit parameters of coding blocks

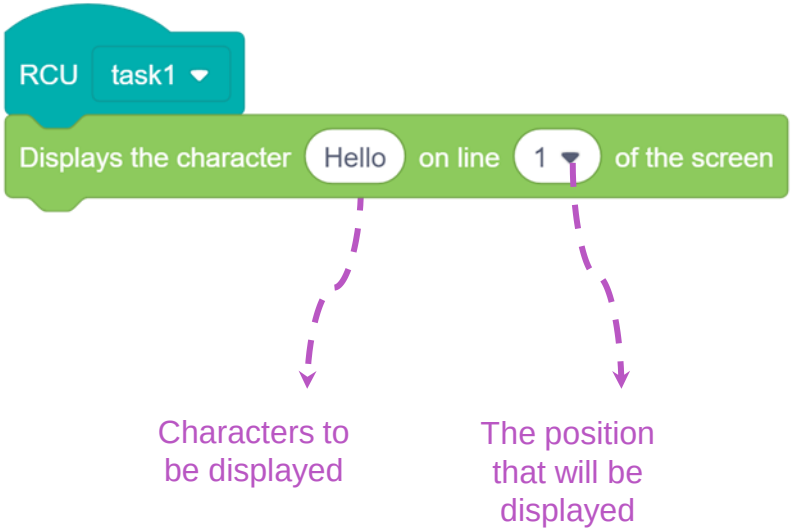

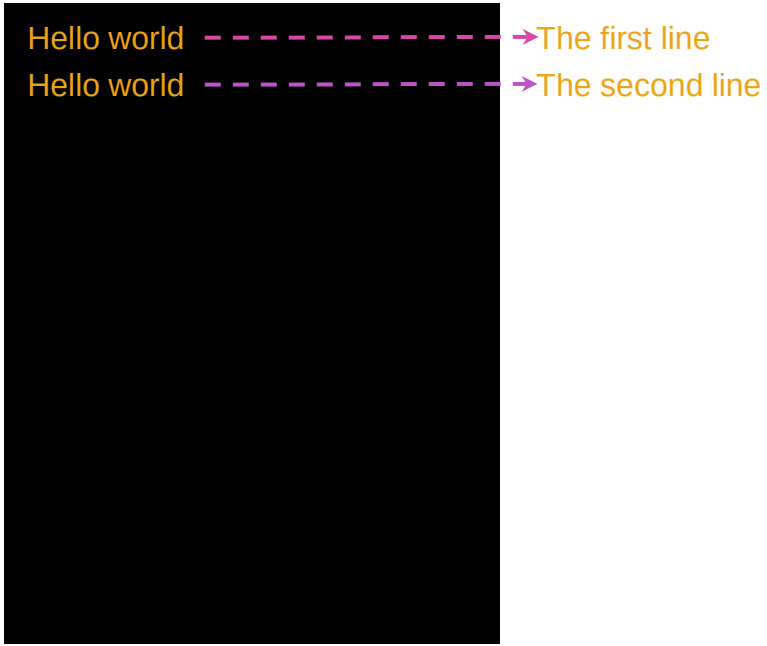

Display Text



Display English on the first line and Chinese on the second line.

“

How do I download the program to the controller?

”

Download the Program

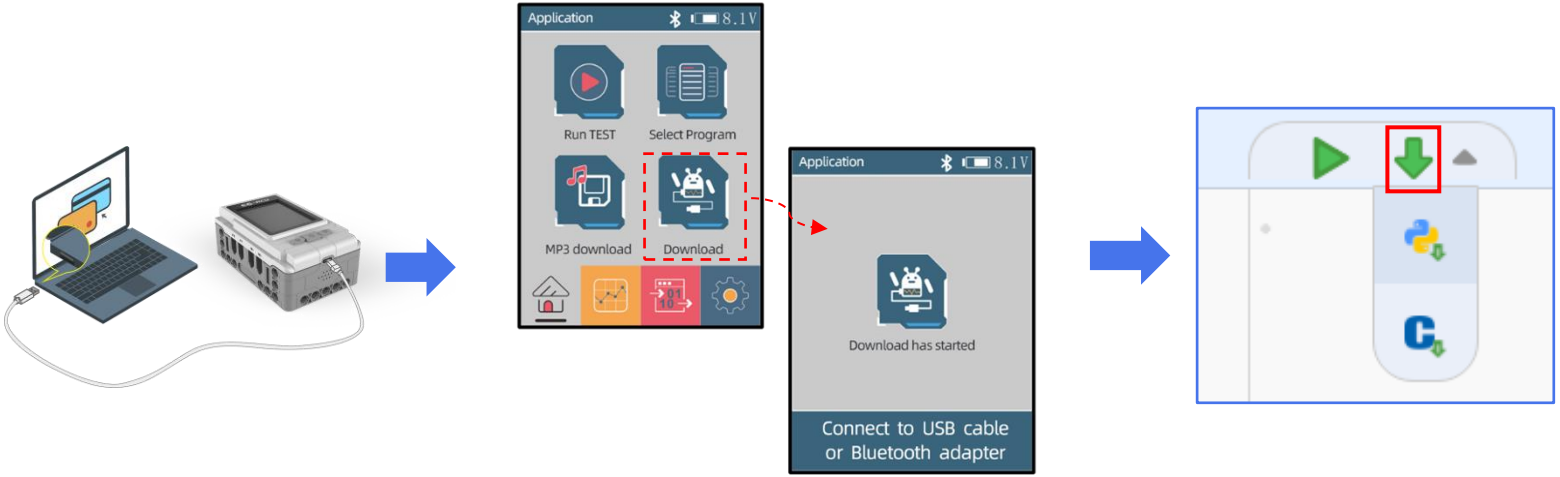

1. Connect the controller

2. Enter the downloading mode

3. Download the program

Run the program

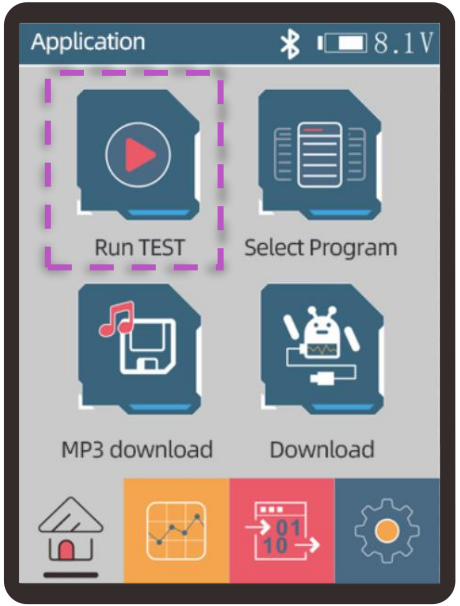

Click "Run Program" on the controller.

If there is no response after running, it may be that the program was not downloaded successfully.

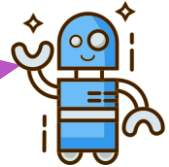

Expansion Tasks

Please display numbers and characters on the controller screen at the same time.



Display digits

When displaying numbers and text, different programming modules are used, and the alignment directions on the screen are also different.

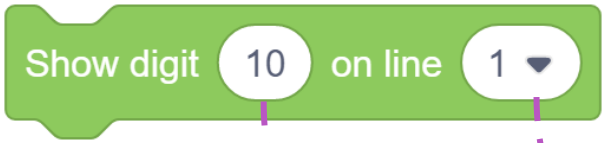

Number to be displayed

The position that will be displayed

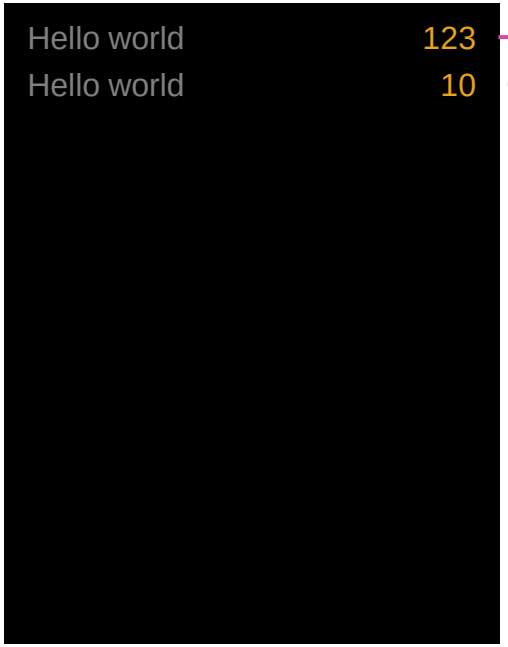

The first line

The second line

Expansion Program



Think about the display effect of this, will the characters and numbers overlap?

Quiz

Single-choice question

Which of the following descriptions is incorrect?

A. The controller is equivalent to the brain of the robot

B. The controller can only download programs when it enters the downloading mode

C. The controller task module cannot be omitted

D. The controller can display Chinese symbols

Answer: D

Further Reading

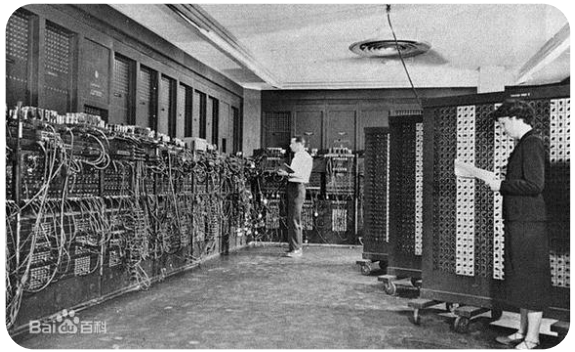

ENIAC

Computer languages are generally divided into three categories: machine language, assembly language, and high-level language. These three languages are exactly the three stages of the history of computer language development.

On February 14, 1946, the world's first computer ENIAC was born, using the most primitive punched cards. The language used on this card is a language that only experts can understand, which is very different from human language. This language is called machine language.

Further Reading

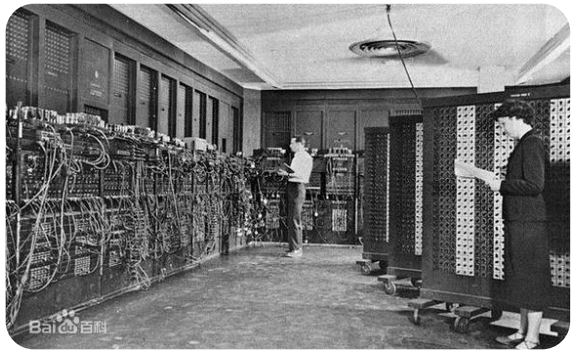

ENIAC

When computer language developed to the second generation, assembly language appeared. Assembly language replaced machine language with mnemonics.

When computer language developed to the third generation, it entered the "human-oriented" high-level language. High-level language is a programming language that is close to people's usage habits. It allows calculation programs to be written in English, and the symbols and formulas in the program are similar to daily mathematical formulas.

Thanks!