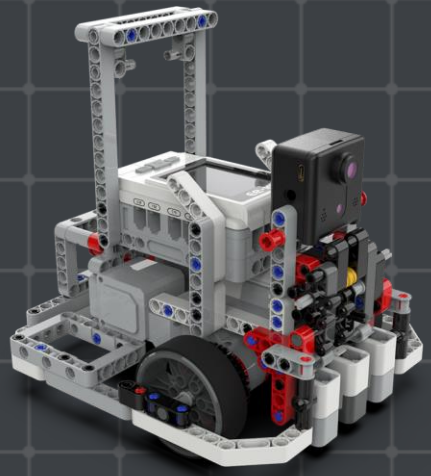

Lesson 12 | Remote Control Car |

Key points from this lesson:

1. Learn how to connect two controllers via Bluetooth

2. Learn how to let the controller send and receive data via Bluetooth

Possible difficulties from this lesson:

1. Differentiate between the Bluetooth connection modes of the host and the slave

Remote control car

Remote control toy cars are a common and interesting toy. We only need to hold the remote controller and move our fingers to operate the buttons on it to make the toy car run.



Bluetooth remote control



Some toy cars can also be remotely controlled by mobile phones. They need to connect to the mobile phone via Bluetooth communication and then use the mobile phone software to control the toy car.

Effect Demonstration



Project Tasks

Design a remote control car model and use Bluetooth communication to control the toy car.

Requirements for robot functions:

1. Press the left button of the remote control, and the toy car will turn left about 90 degrees.
2. Press the right button of the remote control, and the toy car will turn right about 90 degrees.
3. Press the touch sensor of the remote control, and the toy car will go straight forward.

Build a robot

1

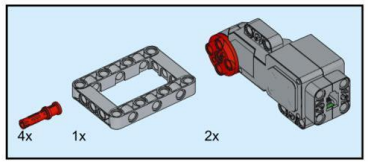

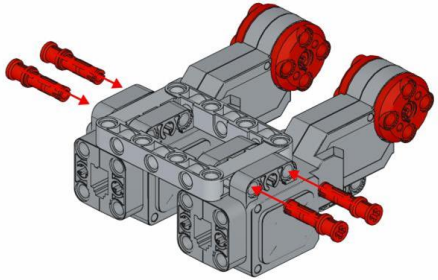

2

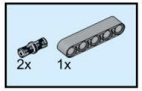

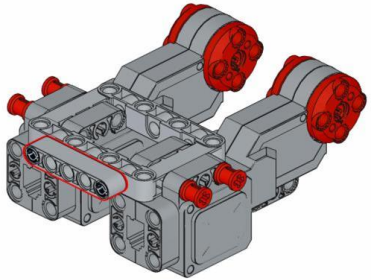

Install the chassis

Build a robot

3

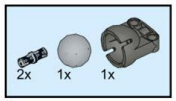

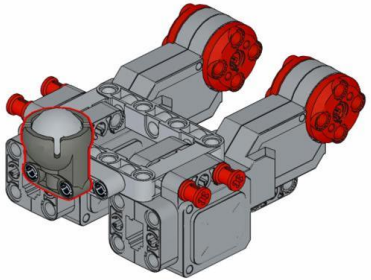

4

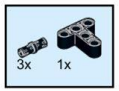

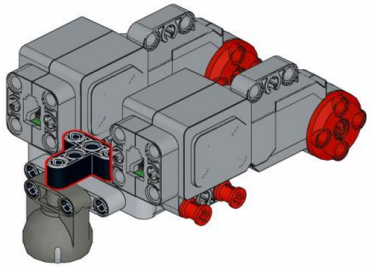

Build a robot

5

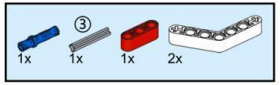

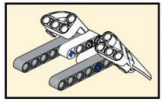

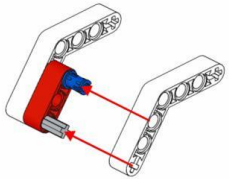

6

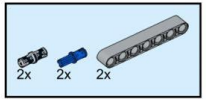

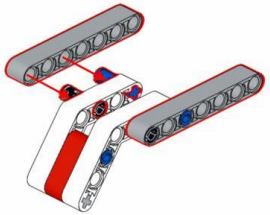

Build a robot

7

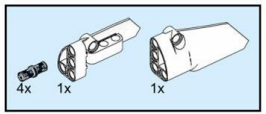

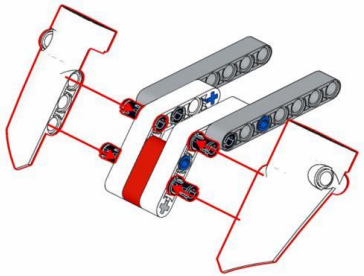

8

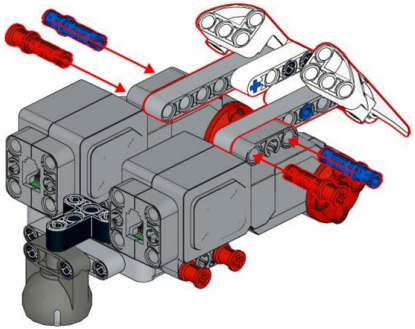

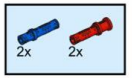

Build a robot

9

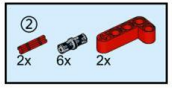

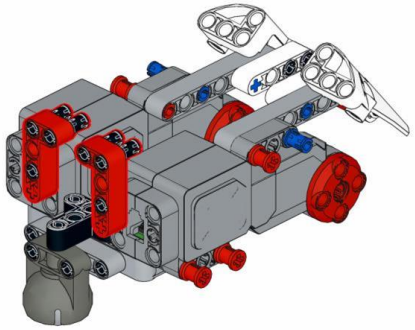

10

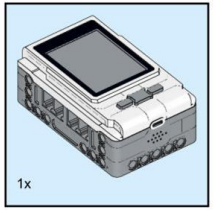

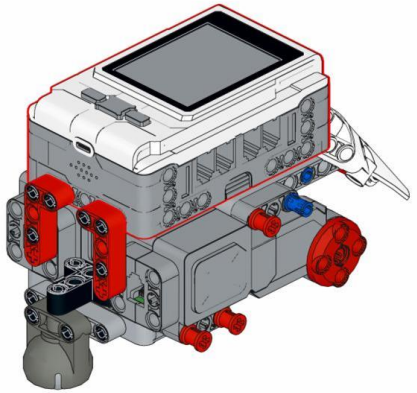

Install the controller

Build a robot

11

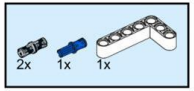

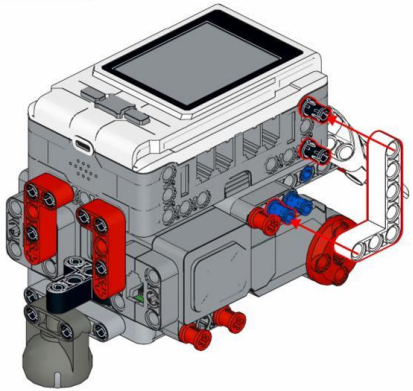

12

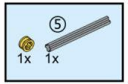

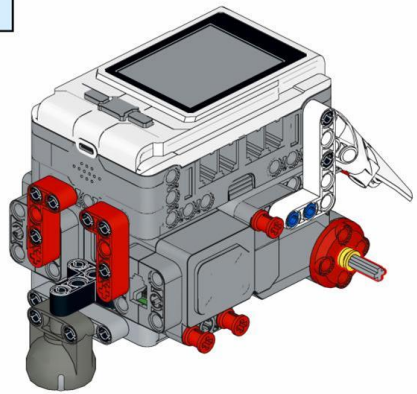

Build a robot

13

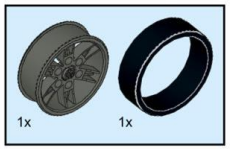

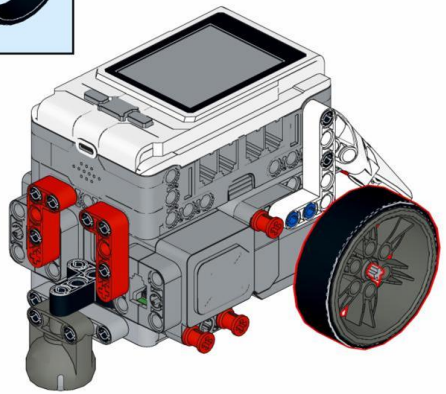

14

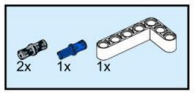

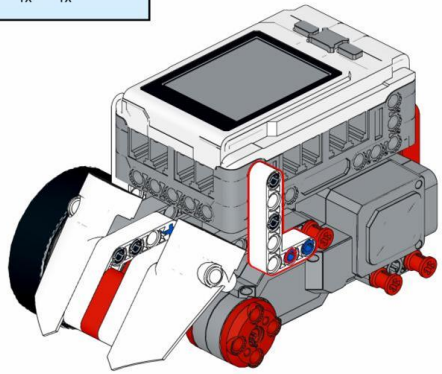

Build a robot

15

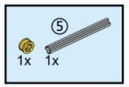

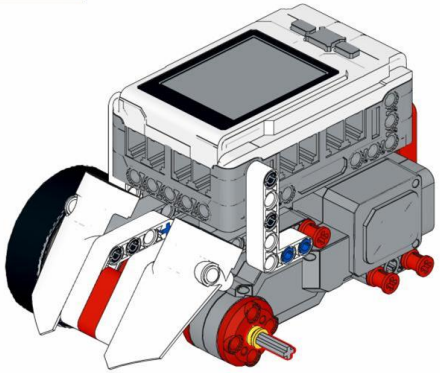

16

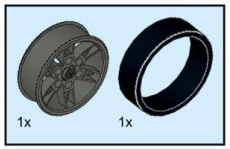

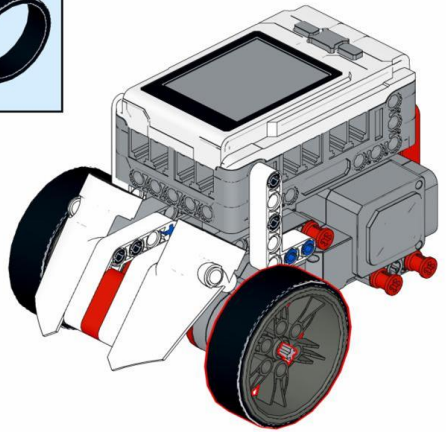

Build a robot

17

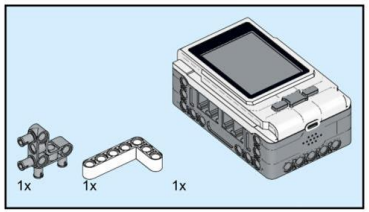

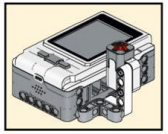

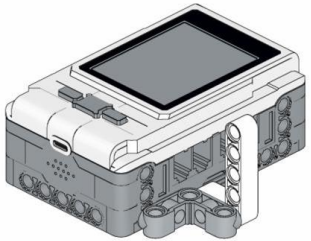

18

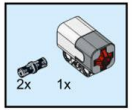

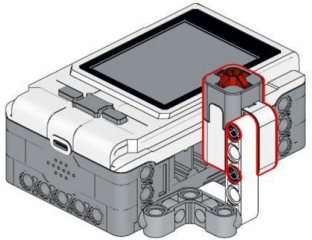

Install the remote control

Build a robot

19

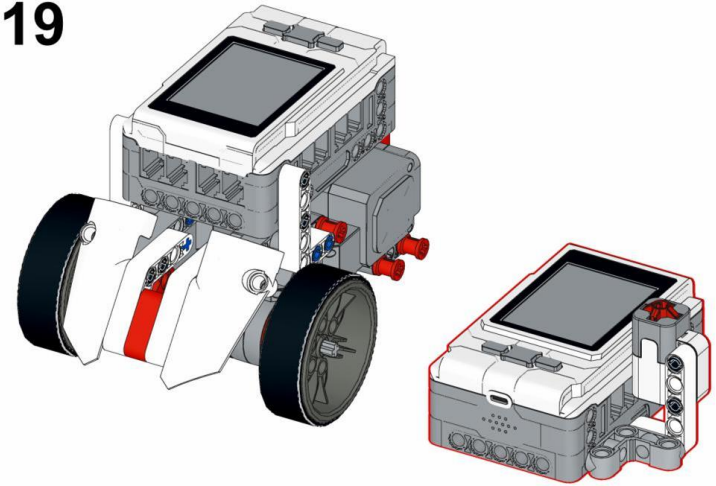

20

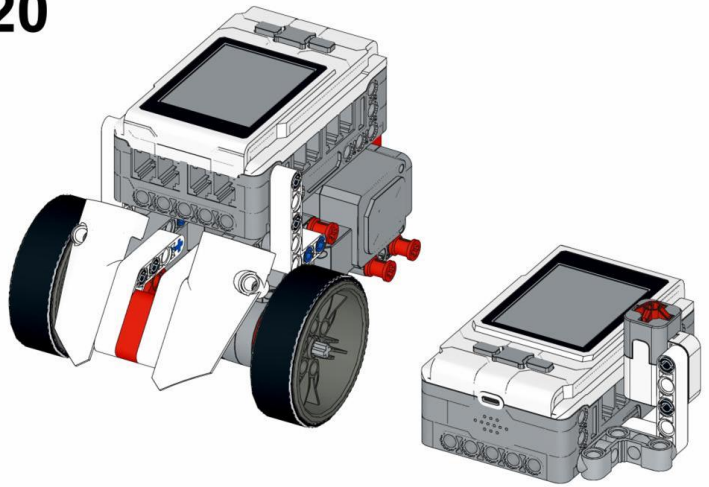

Hardware Connection

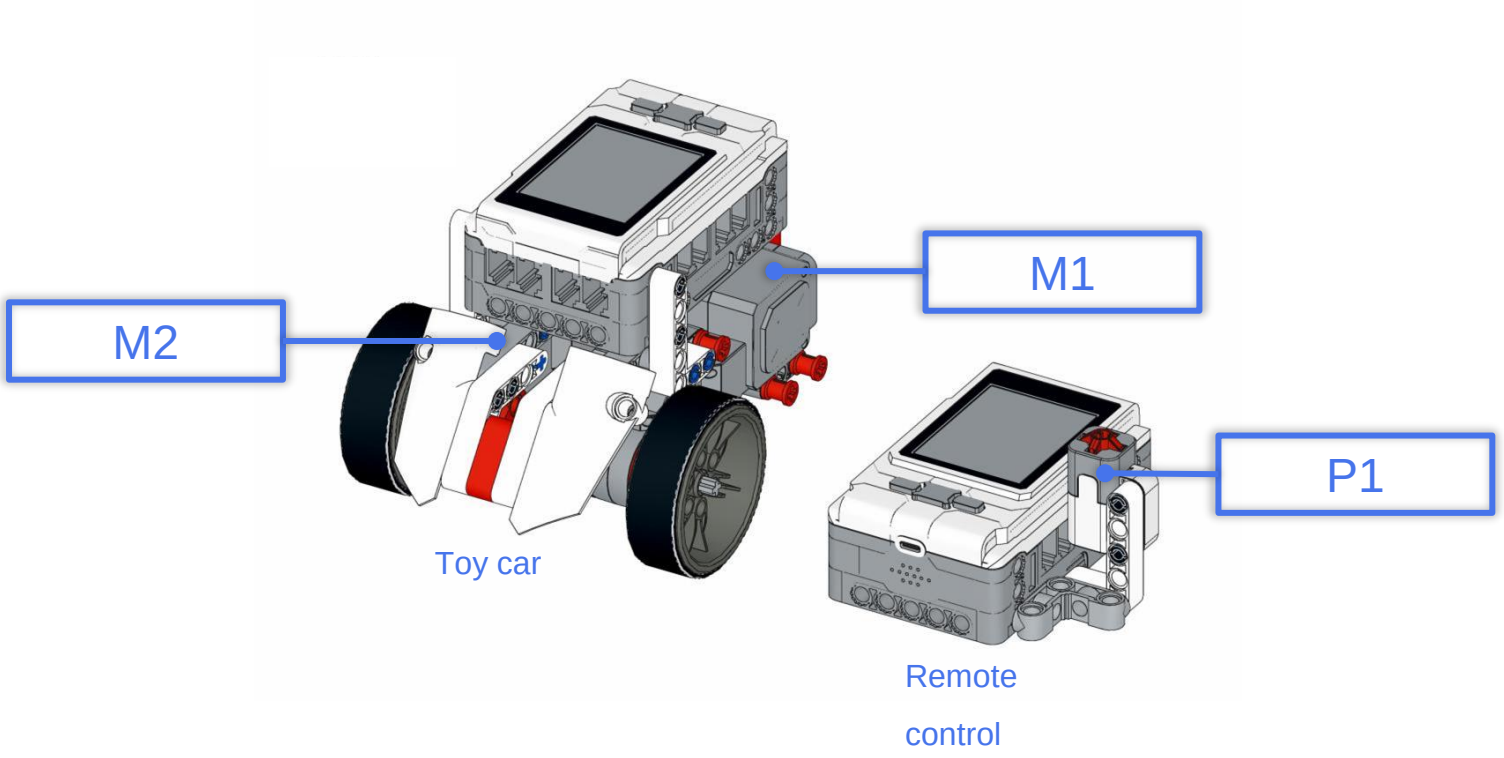

“

How do we realize the function of Bluetooth remote control?

”

Host and Slave

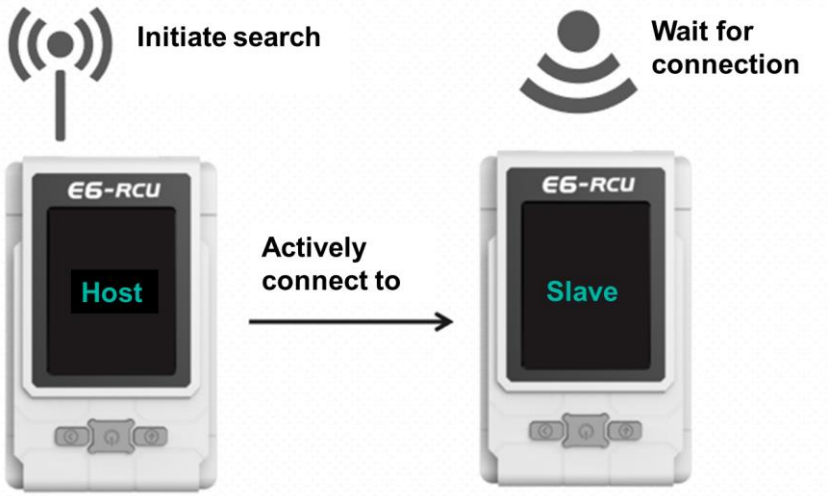

The Bluetooth of the E6 controller can be set to host mode or slave mode. The host can search for other controllers and actively establish a connection; the slave cannot actively establish a connection and can only wait for other hosts to request a connection.

Modify the name of bluetooth device

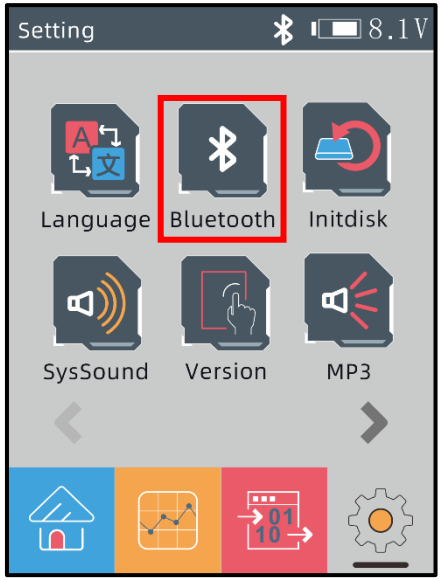

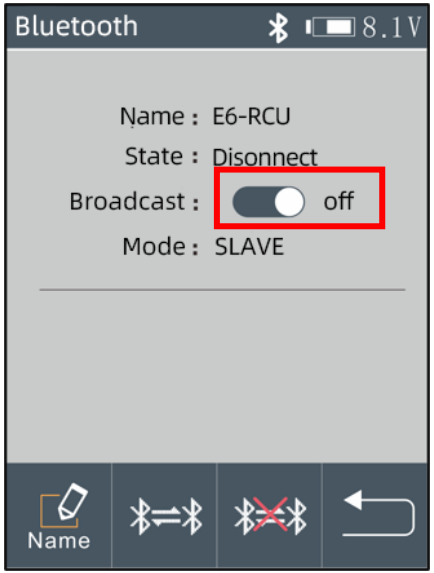



① Turn on the controller and then click the “Bluetooth” icon.

② Turn on the Bluetooth broadcast, and then click the “Name” icon.

③When modifying the name, enter numbers or letters, such as "123", or "456", and click "OK". Note that different controllers need to have different names.

Active Connection

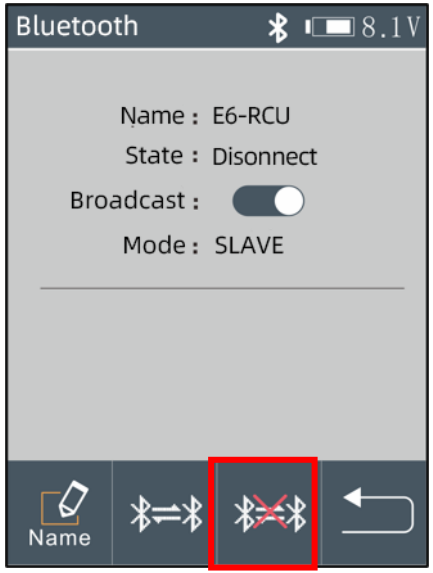

④Set as a slave: Click the disconnect icon to set the controller as a slave.

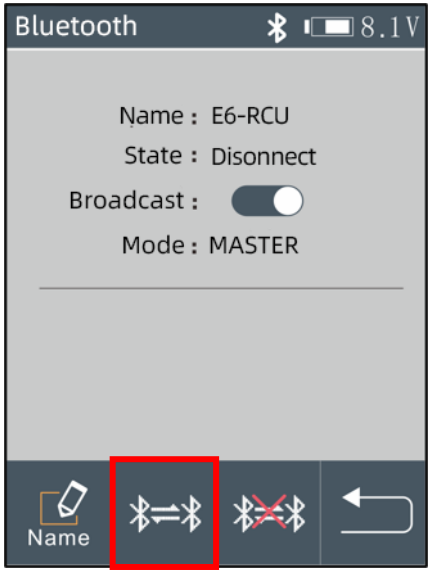

⑤Set the host: Click "Connect" to set the controller as the host and automatically search for slaves.

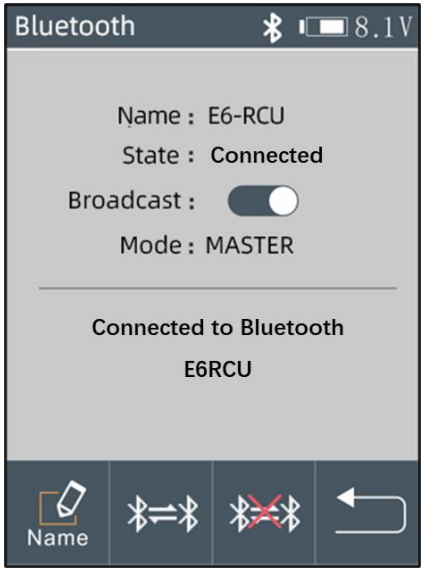

⑥After waiting for a while, "Connected" and the name of the connected Bluetooth device will be displayed.

Bluetooth connection requires two controllers: one as the host and the other as the slave. Therefore, two people need to collaborate.

Operation demo video



Coding block - RCU send Bluetooth data

This module enables the controller to send data to another controller via Bluetooth.

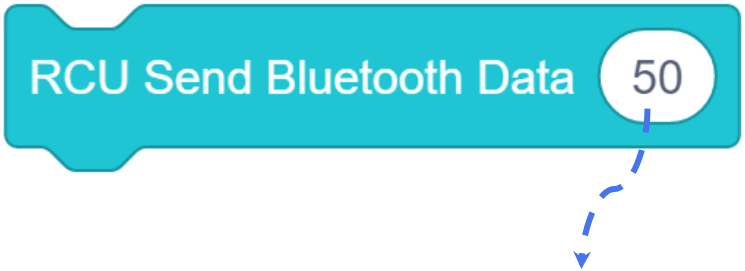

Coding Block - Get Bluetooth Data

This enables the controller to receive data sent by another controller via Bluetooth.

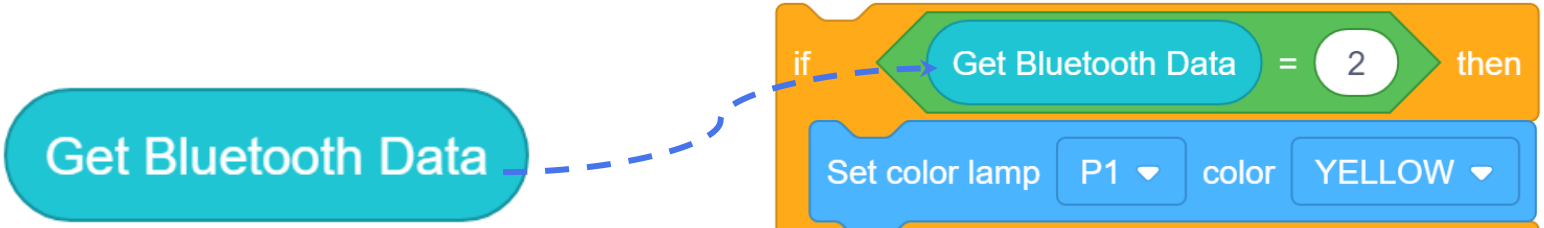

The received data can be compared by numerical value to make judgments

Send and receive data by programming

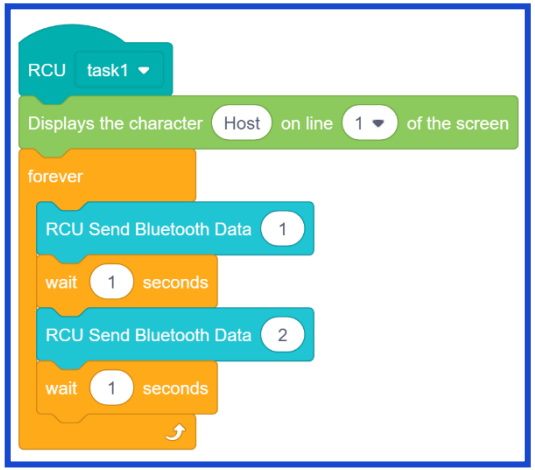

Downloaded to remote control

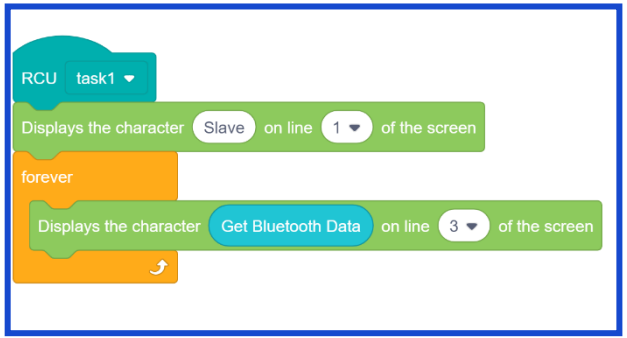

Downloaded to Toy Car

Let the remote control send data 1 and 2 alternately, and the toy car receives the data and displays it.

Download the program and run the test.



1. Let the remote control send data

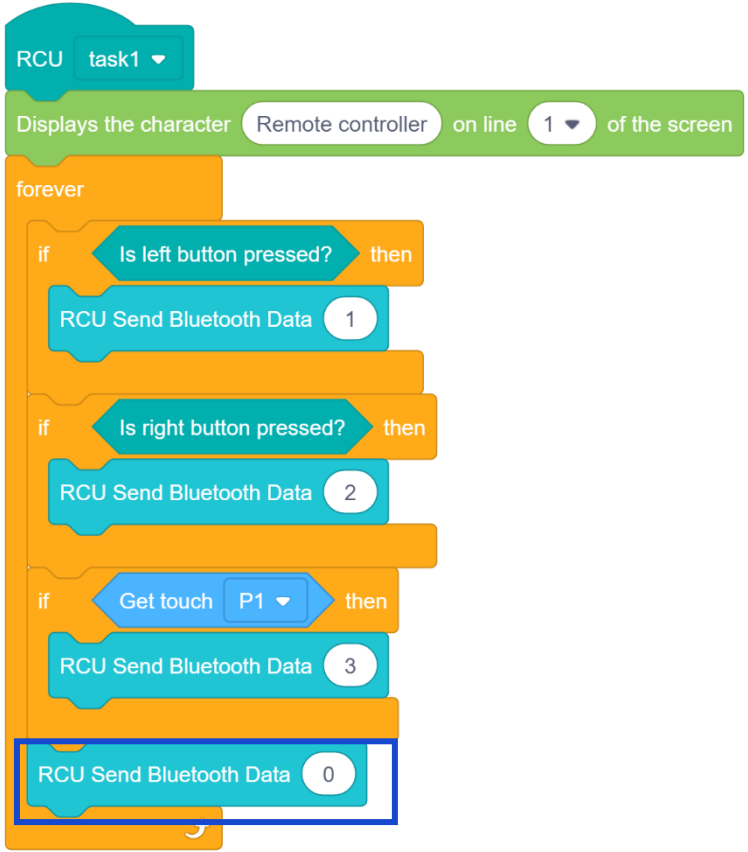

If the left or right button or touch sensor is pressed, the corresponding data is sent.

When Bluetooth is set to send certain data, it will continue to send this data until it is set to send other data.

So when the button is not pressed, the data "0" is sent.

2. The toy car receives the data and make judgements

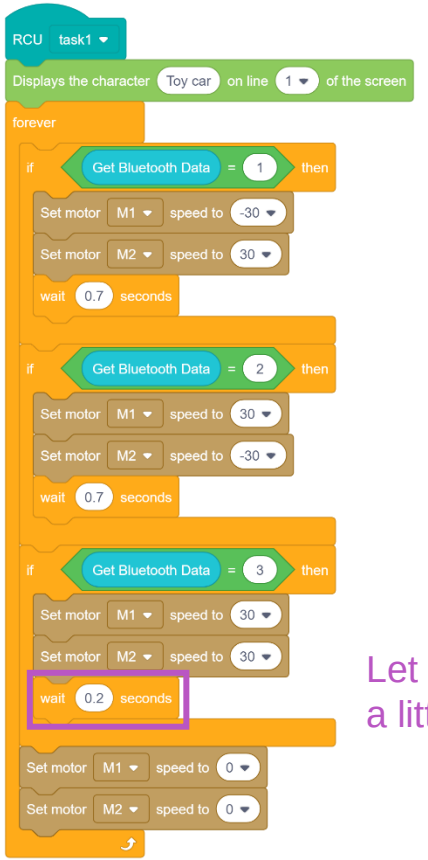

Let the motor run a little longer

After receiving the data, the toy car makes corresponding actions.

Note that a waiting time should be added in the program of straight driving, such as 0.2 seconds so that the motor can rotate for a little longer before stopping.

Expansion Program

Added a prompt: Bluetooth has been connected successfully



Expansion Program

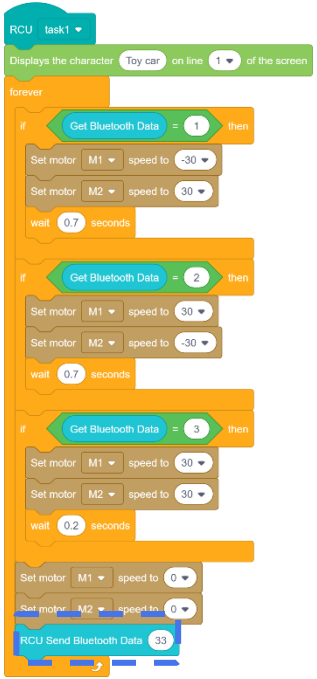

The toy car keeps sending the data "33".

Expansion Program

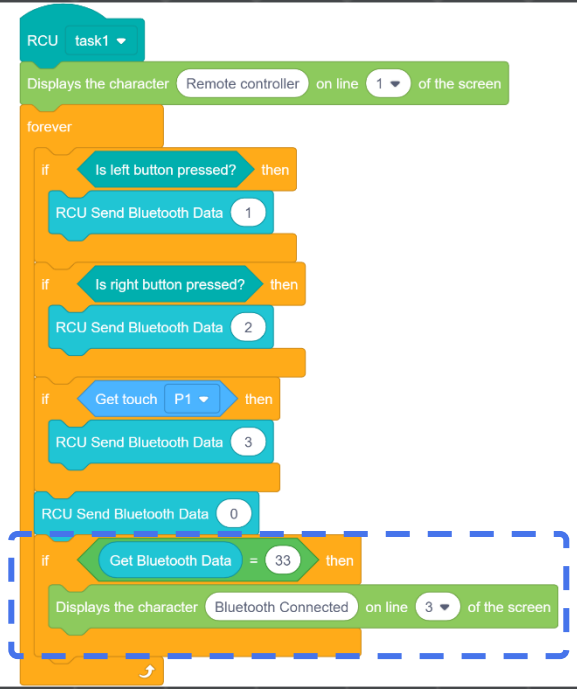

If the remote control receives the data "33", it will display "Bluetooth Connected".

Quiz

Single-choice question

The correct description is ( )

A. Bluetooth can be set to host mode or non-host mode

B. Bluetooth device names can use Chinese

C. Three controllers can be used for Bluetooth connection

D. The host and slave can send and receive data to each other

Answer: D

Further Reading



The name of the Bluetooth communication technology standard comes from Harald, a king who unified Denmark in the 10th century. His name was later used to represent the wireless communication technology standard because Bluetooth technology can connect different devices wirelessly, just like the king unified different countries.

The core of Bluetooth is short-range radio communication, which is based on frequency hopping spread spectrum (FHSS) technology. This technology was first proposed by Hollywood actress Hedy Lamarr and pianist George Antheil in a patent application in August 1942.

Further Reading



They were inspired by the number of keys on the piano and used 88 different carrier frequencies to control the torpedoes. Because the transmission frequency is constantly jumping, it has certain confidentiality and anti-interference capabilities. At first, the technology did not attract the attention of the US military. It was not until the 1980s that it was used by the military for wireless communication systems on the battlefield. Frequency hopping spread spectrum (FHSS) technology later played a key role in solving wireless data transmission and reception problems in Bluetooth, Wi-Fi, and 3G mobile communication systems.

Thanks!